

South elevation @1:100

Scale
0 1 2 3 4 5

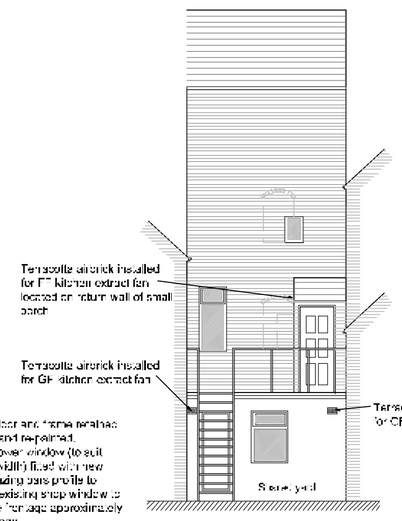

West elevation @1:100



East elevation @1:100

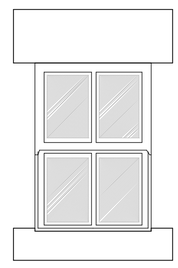

New sash window 1:20

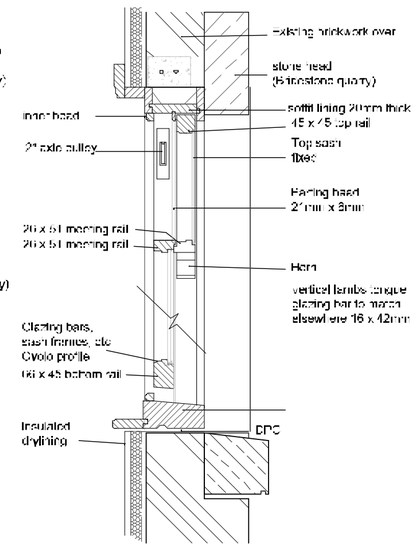

Section thro' sash window @1:10

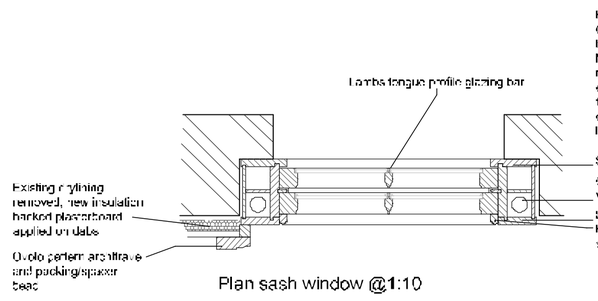

Plan sash window @1:10

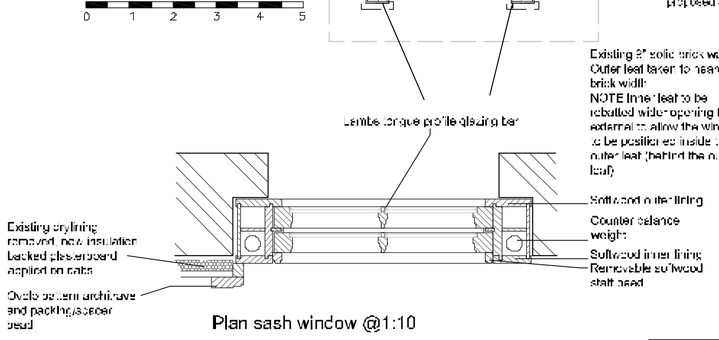

Plan sash window @1:10

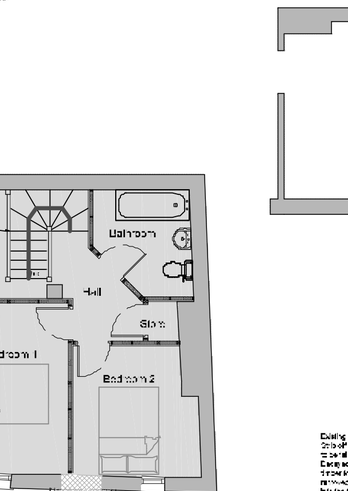
Existing stairs to be stripped out and removed from site, new timber staircase fitted with moulded timber handrails and balustrading.
Existing timber floor joists to be carefully stripped out and re-fitted at a height to align with the existing door head
Existing timber floor joists to be carefully stripped out and re-fitted at a height to align with the existing door head
Existing concrete slab removed from light well, new stone plinth formed around edge of the lightwell using locally sourced natural sandstone, bedded on lime/sand mortar, with stainless steel dowels chemical resin grouted into the brick substrate.
Bespoke wrought iron type railings painted black to match existing with arrow head finial, with vertical bars individually chemical resin grouted into the stone plinth into pre-drilled holes and pointed/sealed with Grey flexible sealant (Lead Mate or similar.
NOTE: Structural stainless steel dowels approx 20mm Ø to be fitted on the corner of the railings and also where the railing returns to the window/door opening. Railings to be only attached at the top where the railing abuts the wall, with a cranked end, plugged and screwed to the wall with domed screw heads
Existing timber floor joists to be carefully stripped out and re-fitted at a height to align with the existing door head