Copyright of this drawing is vested in the Architect and it must not be copied or reproduced without consent. Figured dimensions only are to be taken from this drawing. All contractors must visit the site and be responsible for taking and checking all dimensions relative to their work. bpArchitecture are to be advised of any variation between drawings and site conditions.
DO NOT SCALE OFF THIS DRAWING.....IF IN DOUBT ASK

Rev.	Drawn	Comments	Date

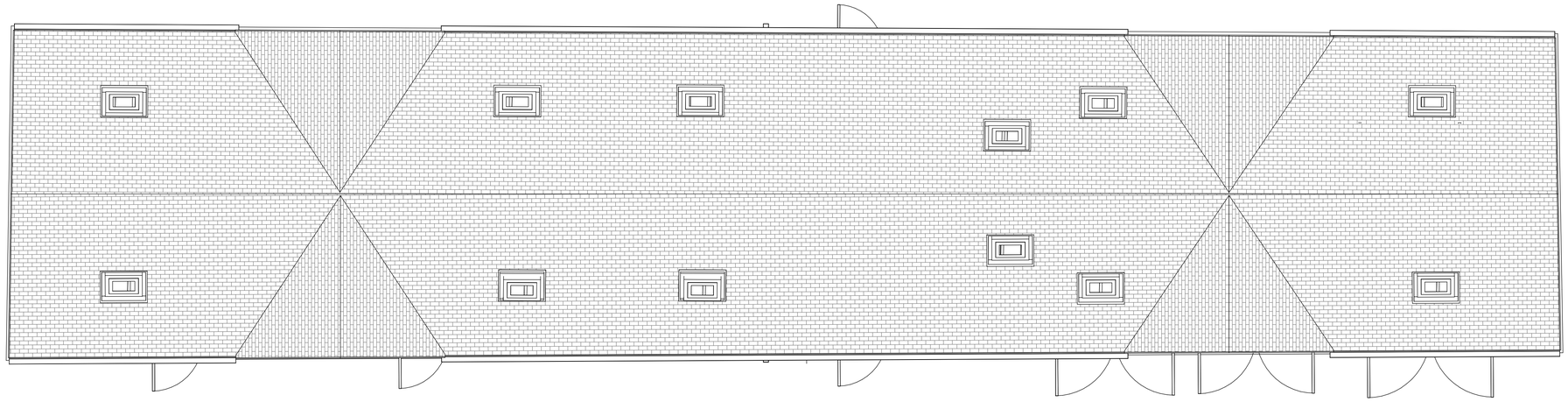

AS(0)05 4

3 AS(0)05

Roof Plan
1 : 50

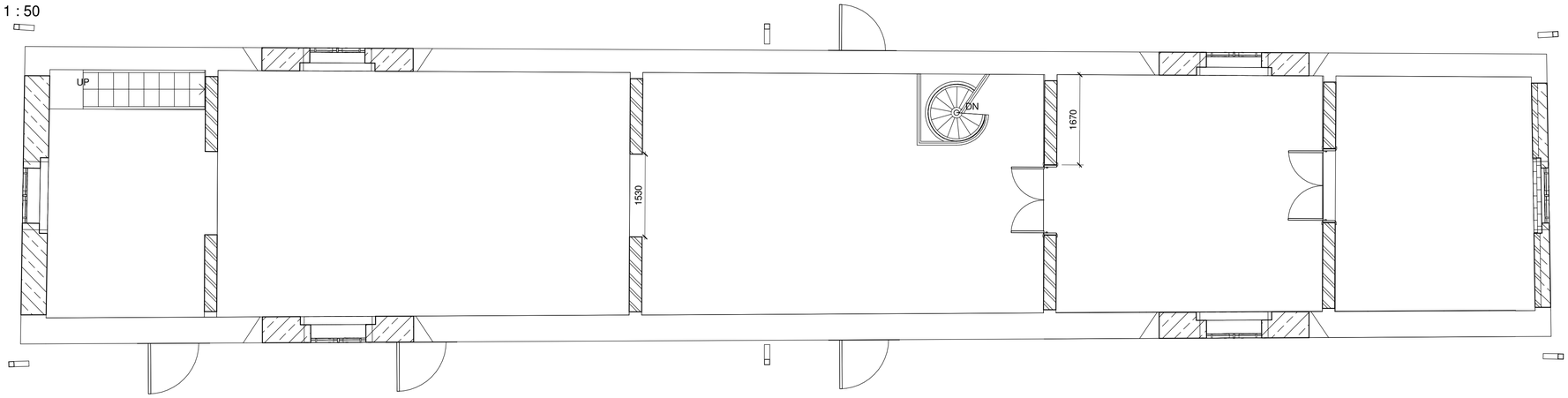

3 AS(0)05

First Floor Plan
1 : 50

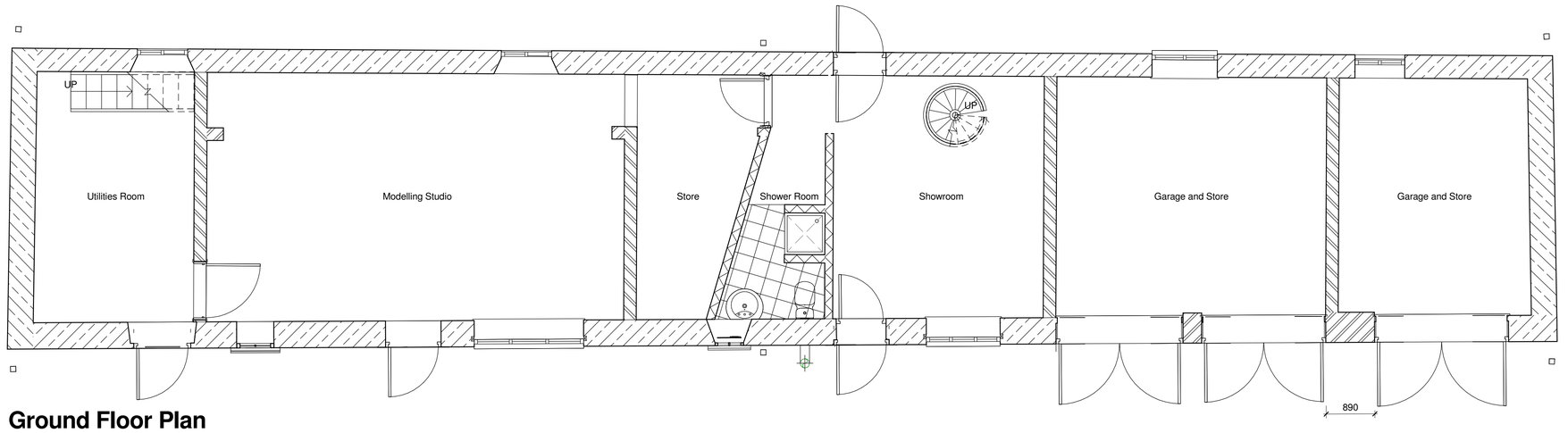

AS(0)05 4

Ground Floor Plan
1 : 50

2 AS(0)05

North

0 1 2 3 4 5
GRAPHIC SCALE: 1:50

bp Architecture
☎: 01782 515 555
Enquiries@bpArchitecture.co.uk
: www.bparchitecture.co.uk
93 High Street Biddulph Staffs ST8 6AB
Architects - Interior Architecture - Landscape

Client
Ms Louise Adams and Mr Mark Delf

Project
The Fenns Barn, Moss Hill, Stockton Brook

Title **Existing Floor Plans**

Planning

Status **Planning**

Date **23/03/16** Drawn **SS**

Scale @A1 **1 : 50** Checked **BSP**

Project No 15-026 Drawing No. AS(0)04 Rev

A1 File Ref: BPA1

A1