ARBORICULTURAL IMPLICATIONS ASSESSMENT

Client: Ms Janette Newman

Site: 133 Willow Drive
St Edwards Park
ST13 7FG

Date: 04 December 2015

Ref.: THL-R15/78a

CONTENTS

1.0 Introduction

2.0 Arboricultural Implications of the Proposal

3.0 Protection of trees that are retained

4.0 Arboricultural methods

5.0 Appendix A: Tree Works Schedule

6.0 Appendix B: Tree Protection Barriers

7.0 Appendix C: Arboricultural Implications Assessment

8.0 Appendix D: Tree Protection plan

ARBORICULTURAL IMPLICATIONS ASSESSMENT

Site: 133 Willow Drive

1.0 Introduction

1.1 This Arboricultural Implications Assessment should be read in conjunction with Arboricultural Report THL-R15/78

1.2 The survey complies with British Standard 5837:2012 *Trees in relation to design, demolition and construction – Recommendations*. All significant trees on the site have been inspected including any that may be on the boundary or on adjacent land that may be affected by any development. Included in the schedule of trees are the relevant areas of protection for the trees or the Root Protections Areas (RPAs). The relevant distance from each tree from which construction work should be excluded by the erection of a Protective Barrier is also listed.

2.0 Arboricultural Implications of the Proposal

2.1 The proposed development is shown on plan THL-0317-2 attached to this report.

2.2 The development consists of a new garage, work area and home office. It will be located in an area between 133 and 131Willow drive.

2.3 Plan THL-0317-2 shows the proposed development located outside of the RPA's for all trees on or near to the site, and therefore should have little to no impact on them.

2.4 The trees within St Edwards Park are protected by a Tree Preservation Order. It is important to protect the trees throughout the development process. More information on protecting the trees can be found on section 3 of this report.

3.0 Protection of the trees that are retained

3.1 BS 5837:2012 is intended to give recommendations to protect the trees during development and ensure their survival following the construction work. To achieve this there are two main considerations. The first is to protect the roots of the trees and the second to protect the upper parts of the tree, the trunk and branches.

3.2 The main tool to achieve the above is to create “Construction Exclusion Zones” around the trees. These are based on the “Root Protection Area” or RPA as calculated as required in BS 5837:2012. The RPAs for all the trees are included in the survey schedule. It is possible to vary the RPA from a circle to allow for specific site conditions.

3.3 To achieve an effective “Construction Exclusion Zone” (CEZ) it is necessary to erect a protective barrier along the edge of the RPA’s. The details of this fencing are shown in Figure 2, which is included as an appendix (B) to this report. The barrier should be erected a minimum distance from each tree. This minimum distance is provided as a radius in the Survey Schedule and shown on the plan. It is essential that this barrier is well anchored into the ground to prevent it being moved. It is acceptable to use “Herras” fencing in concrete or rubber feet and appropriately back braced in areas where site circumstances and the associated risk of damaging incursion into the RPA are low.

3.4 The Tree Protective Fencing should be installed before any construction work takes place. This includes demolition, site clearance and drainage work.

3.5 Notices should be fixed to the fencing warning personnel not to enter. They should read “CONSTRUCTION EXCLUSION ZONE” – NO ACCESS”.

3.6 Tree should not be used to support notices and under no circumstances should nails, screws or bolts be driven into the trees. Likewise trees should not be used to support cables or lights.

3.7 Care should be taken to avoid the discharge of any material that could contaminate the soil within 15 metres of any tree. This would include: Washings from cement mixers, fuel or oil storage etc. This distance may need to be extended if the ground slopes towards the tree.

3.8 Plan THL-0317-3 shows the recommended location for the tree protection barriers.

4.0 Arboricultural Methods

4.1 The Arboriculturalist or the LA Tree Officer should be consulted if there are any unforeseen issues in relation to any tree on site including any unexpected work within the Root Protection Areas.

4.2 All tree work should be carried out by highly skilled professionals and it is recommended that contractors are selected from the Approved List of Arboricultural Association Contractors. This is obtained from www.trees.org.uk

4.3 All tree work should be carried out to the latest standards based on BS 3998: 2010 'Recommendations for Tree Work'.

Tree Heritage Ltd

Ben Williams

Ben Williams
BSc (Hons) Arb. M.Arbor.A

04/12/2015

Tree Heritage Ltd, 100 North St, Leek, Staffs, ST13 8DQ
T: 01538 384019 E: info@treeheritage.co.uk

APPENDIX A: TREE WORKS SCHEDULE

KEY:

Measurements	Life Stage	Physiological Condition	Category Grading	Symbols
Height - *Metres* Stem Diameter - *Millimetres at 1.5m above ground level* Branch Spread - *Metres (North, South, East and West)* Crown Clearance - *Metres* RPA Radius - *Metres* Estimated Remaining Contribution - *Years* FSB - First Significant Branch - *Metres*	Y - *Young* SM - *Semi-Mature* EM - *Early Mature* M - *Mature* OM - *Over-Mature* V - *Veteran*	G - *Good* F - *Fair* P - *Poor* D - *Dead*	A - *High (green)* B - *Moderate (blue)* C - *Low (grey)* *U - Poor/Trees for removal (red)* **Sub-Categories:** 1 - *Mainly Arboricultural value* 2 - *Mainly Landscape value* 3 - *Mainly Cultural value*	< - *Less than* ~ - *Approximately* > - *Greater than*
RPA - *Root protection area (equivalent to a circle with a radius 12x the stem diameter measured at 1.5m above ground level)*				

Site: 133 Willow Drive, St Edwards Park
Surveyed by: Ben Williams BSc (Hons) Arb. M.Arbor.A
Date: 13/08/2015

Tree Heritage Ltd, 100 North St, Leek, Staffs, ST13 8DQ
T: 01538 384019 E: info@treeheritage.co.uk

Tree Ref.	Species	Height	Stem Diameter	Branch Spread				Crown Clearance	FSB Height + Direction	Life Stage	Phys. Condition	Structural Condition	Recommendations	Estimated Remaining Contribution	Category Grading	RPA Radius
				N	S	E	W									
T1	Silver Birch(Betula pendula)	16	290	4	4	4	4	6	6(N)	EM	G	Good condition.	Reduce other trees and shrubs growing through canopy.	40+	A1	3.48
T2	Common Lime(Tilia X europaea)	17	590	7	7	7	7	2.5	4.5(S)	M	G	Good condition.	No work required.	40+	A1	7.08
T3	Sycamore(Acer pseudoplatanus)	14	560	5	6	6	6	5	3.5(S)	M	G		No work required.	40+	A1	6.72
T4	Lawson Cypress(Chamaecyparis lawsoniana)	13	420	3.5	3.5	3.5	3.5	4.5	5(N)	M	F	Weak fork. Low bud/leaf density.	No work required.	10+	C1	5.04
T5	Silver Birch(Betula pendula)	5	100	1.5	1.5	1.5	1.5	1.5	1(N)	SM	G	In neighbouring property.	No work required.	20+	C1	1.2

Figure 2 **Default specification for protective barrier**

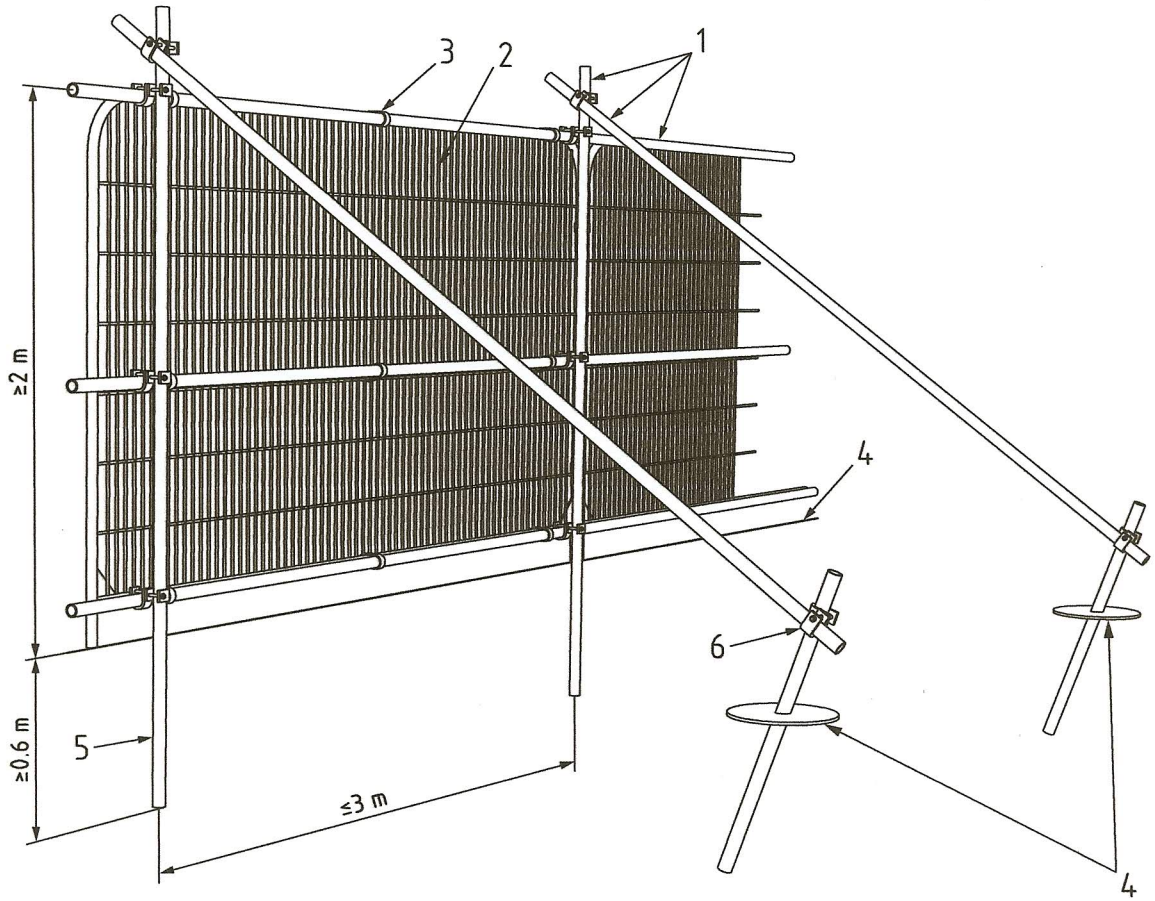

Key

1 Standard scaffold poles
2 Heavy gauge 2 m tall galvanized tube and welded mesh infill panels
3 Panels secured to uprights and cross-members with wire ties
4 Ground level
5 Uprights driven into the ground until secure (minimum depth 0.6 m)
6 Standard scaffold clamps

Figure 3 **Examples of above-ground stabilizing systems**

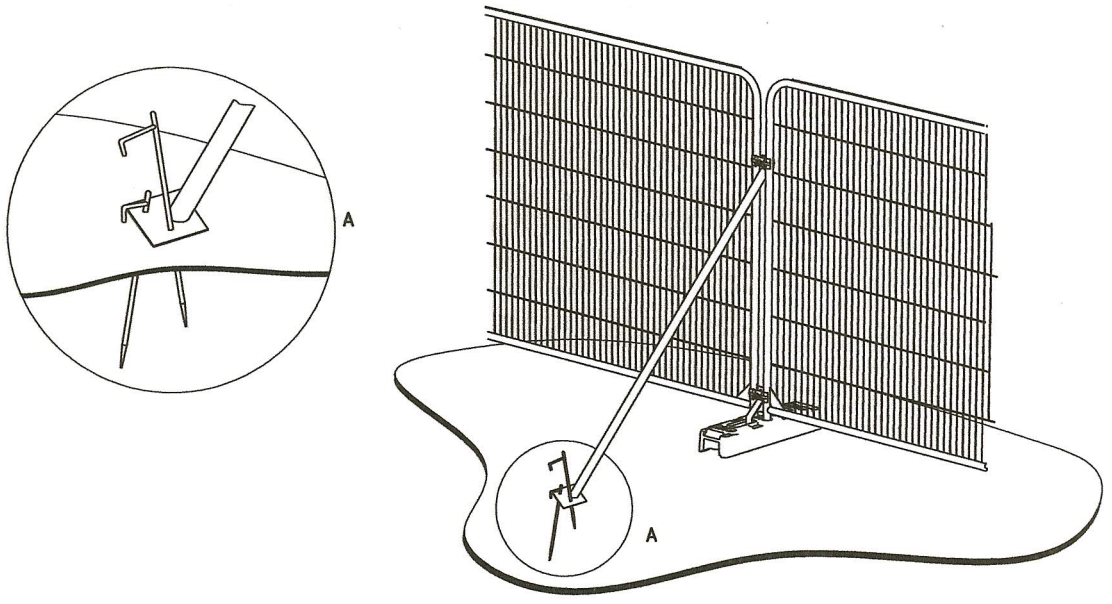

a) Stabilizer strut with base plate secured with ground pins

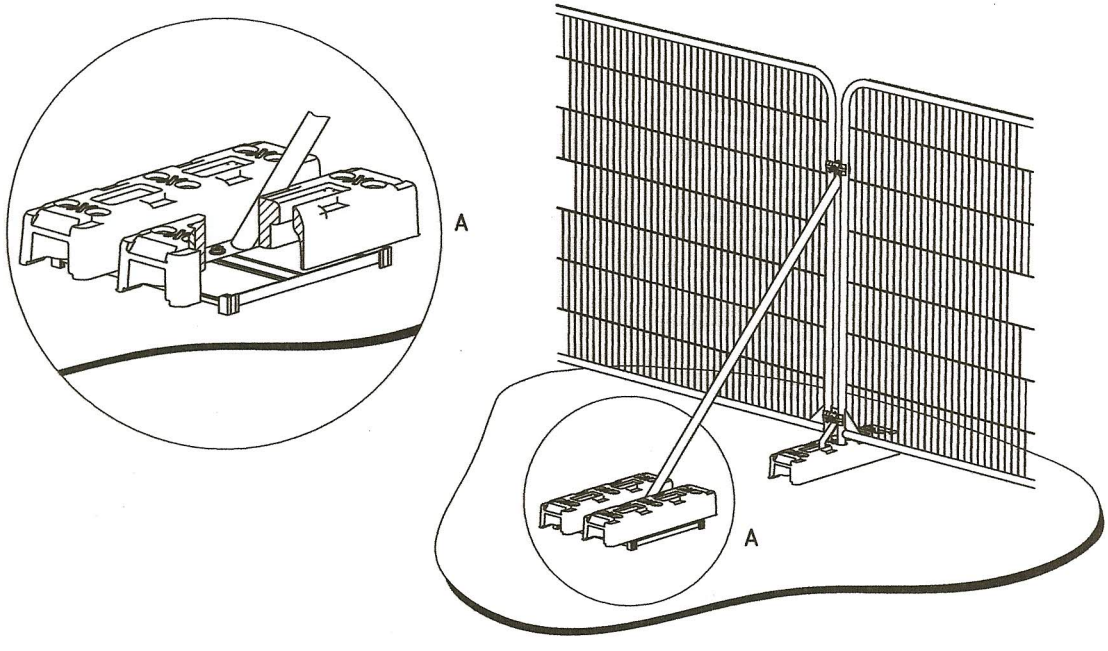

b) Stabilizer strut mounted on block tray



Notes:

1. Do not scale off this drawing. Tree canopies are symbolic only and are representative of the average spread; this may not represent the true outline. Note that the tree stem may not sit centrally to canopy. The stem is not shown to scale - see schedule.
2. The original of this drawing was produced in colour – a monochrome copy should not be relied upon.

Rev:	Date:	Status/Amendments:	By:

Key:

- Category A Tree
- Category B Tree
- Category C Tree
- Category U Tree
- Branch Spread
- Tree to be Removed
- Root Protection Area (RPA)
- First Significant Branch Direction
- Root Protective Barrier
- Special Measures
- Tree Shadow

GROWING SINCE 1982
TREE HERITAGE
Tree Heritage Ltd, 100 North Street,
Leek, Staffordshire, ST13 8DQ
Telephone: 01538 384019
treeheritage.co.uk info@treeheritage.co.uk

Client:
Ms Janette Newman

Project:
Proposed new build garage & office
133 Willow Drive, St Edwards Park
ST13 7FG

Drawing Title:
Arboricultural Implications Assessment

Scale:	Paper Size:	Date Created:
1:200	A3	02/12/15
Drawing Number: THL-0317		Drawing Revision: 2



Notes:

1. Do not scale off this drawing. Tree canopies are symbolic only and are representative of the average spread; this may not represent the true outline. Note that the tree stem may not sit centrally to canopy. The stem is not shown to scale - see schedule.
2. The original of this drawing was produced in colour – a monochrome copy should not be relied upon.

Rev:	Date:	Status/Amendments:	By:

Key:

- Category A Tree
- Category B Tree
- Category C Tree
- Category U Tree
- Branch Spread
- Tree to be Removed
- Root Protection Area (RPA)
- First Significant Branch Direction
- Root Protective Barrier
- Special Measures
- Tree Shadow

GROWING SINCE 1982
TREE HERITAGE
Tree Heritage Ltd, 100 North Street,
Leek, Staffordshire, ST13 8DQ
Telephone: 01538 384019
treeheritage.co.uk info@treeheritage.co.uk

Client:
Ms Janette Newman

Project:
Proposed new build garage & office
133 Willow Drive, St Edwards Park
ST13 7FG

Drawing Title:
Tree Protection Plan

Scale:	Paper Size:	Date Created:
1:200	A3	04/12/15
Drawing Number: THL-0317		Drawing Revision: 3