20 WITHAM WAY, BIDDULPH

(A)

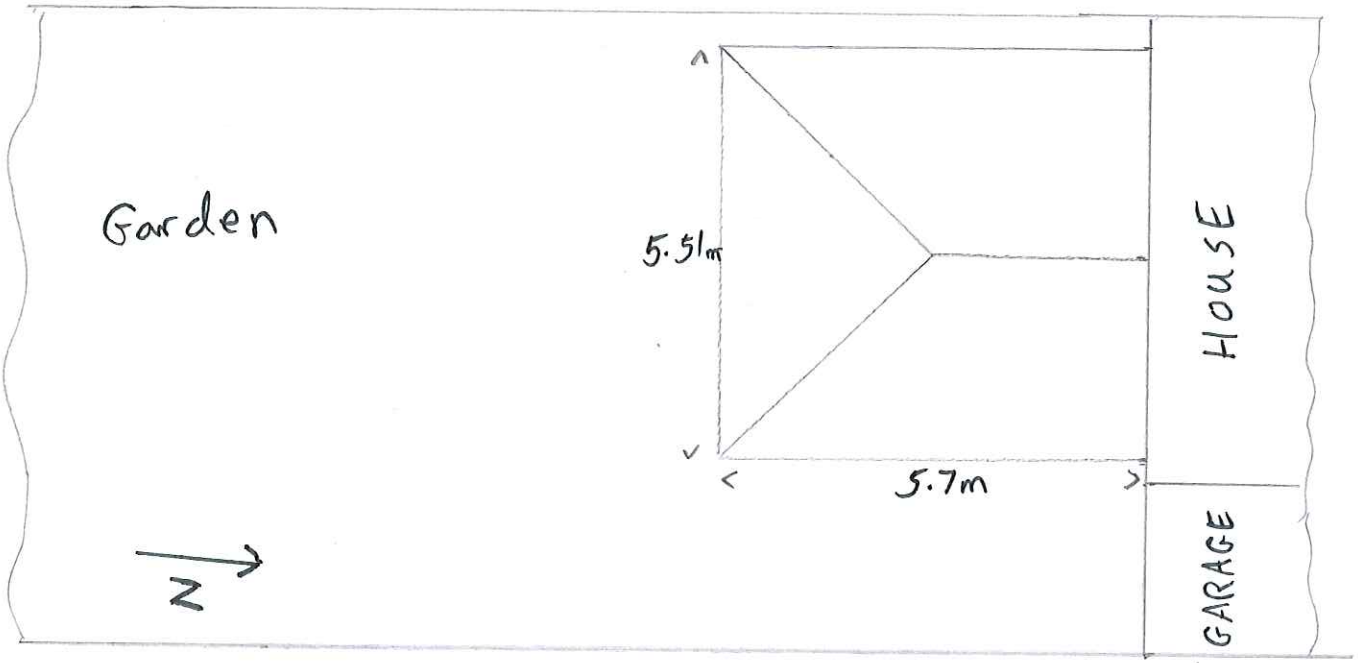

Scale 0 1 2 3 4 5m

(B) South-facing.

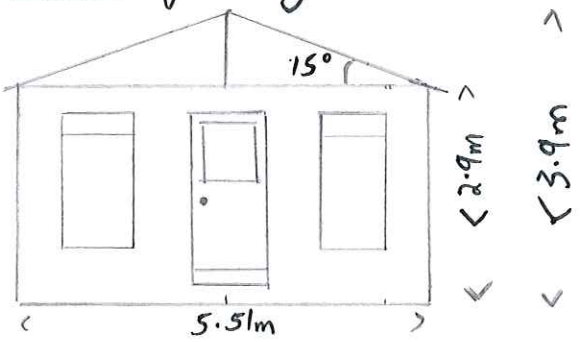

(C) West-facing, adjoining 18 Witham Way

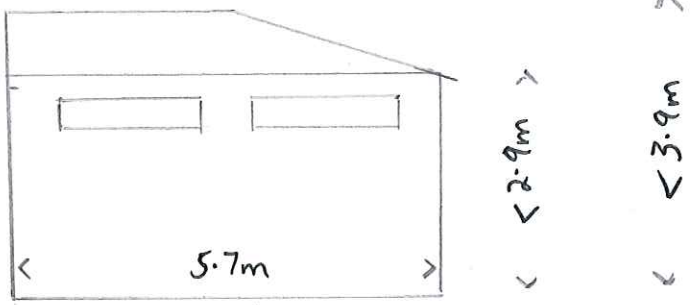

Height @ eaves = 2.9m or less

Height @ ridge = 3.9m or less

(D) East-facing, adjoining 22 Witham Way

