STAFFORDSHIRE moorlands DISTRICT COUNCIL

ACHIEVING · EXCELLENCE

Staffordshire Moorlands District Council
Moorlands House, Stockwell Street, Leek
Staffordshire Moorlands, ST13 6HQ
Telephone: 0845 605 3013
www.staffsmoorlands.gov.uk

Application for Planning Permission. Town and Country Planning Act 1990

Part 1.

Publication of planning applications on council web sites
Please note that with the exception of applicant contact details and Certificates of Ownership, the information provided on this application form and in supporting documents may be published on the council's website.
If any other information that is provided as part of the application which falls within the definition of personal data under the Data Protection Act and is not to be published on the council's website, please contact the council's planning department.

1. Applicant Name, Address and Contact Details

Title: Mr | First name: Clive | Surname: Rhodes

Company name: Staffordshire Moorlands District Council

Street address: Moorlands House, Stockwell Street,

Town/City: Leek,

County: Staffordshire,

Country: UK.

Postcode: ST13 6HQ

	Country Code	National Number	Extension Number
Telephone number:	0044	01538-395555	
Mobile number:			
Fax number:			

Email address:

Are you an agent acting on behalf of the applicant? (•) Yes ( ) No

2. Agent Name, Address and Contact Details

Title: Mrs | First Name: Susan | Surname: Higton

Company name: Staffordshire Moorlands District Council

Street address: Moorlands House, Stockwell Street,

Town/City: Leek,

County: Staffordshire,

Country: UK.

Postcode: ST13 6HQ

	Country Code	National Number	Extension Number
Telephone number:	0044	01538-395400	4209
Mobile number:			
Fax number:			

Email address: susan.higton@staffsmoorlands.gov.uk

3. Description of the Proposal

Please describe the proposed development including any change of use:

Proposed installation of CCTV camera at Somerfield car park, Cheadle, ST10 1YP.

Has the building, work or change of use already started? ( ) Yes (•) No

1. Site Address Details

Full postal address of the site (including full postcode where available)

House: 1 Suffix:

House name: Somerfield car park

Street address: Well Street

Town/City: Cheadle

County: Staffordshire

Postcode: ST10 1YP

Description of location or a grid reference
(must be completed if postcode is not known):

Easting: 401082

Northing: 343300

Description

Proposed CCTV camera at Somerfield car park, Cheadle.

5. Pre-application Advice

Has assistance or prior advice been sought from the local authority about this application? (•) Yes ( ) No

If Yes, please complete the following information about the advice you were given (this will help the authority to deal with this application more efficiently):

Officer name:

Title: Mr First name: Chris Surname: Drage

Reference:

Date (DD/MM/YYYY): (Must be pre-application submission)

Details of the pre-application advice received:

Discussions re. proposed CCTV camera with respect to the town centre conservation area and the proximity of listed buildings.

6. Pedestrian and Vehicle Access, Roads and Rights of Way

Is a new or altered vehicle access proposed to or from the public highway? ( ) Yes (•) No

Is a new or altered pedestrian access proposed to or from the public highway? ( ) Yes (•) No

Are there any new public roads to be provided within the site? ( ) Yes (•) No

Are there any new public rights of way to be provided within or adjacent to the site? ( ) Yes (•) No

Do the proposals require any diversions/extinguishments and/or creation of rights of way? ( ) Yes (•) No

7. Waste Storage and Collection

Do the plans incorporate areas to store and aid the collection of waste? ( ) Yes (•) No

Have arrangements been made for the separate storage and collection of recyclable waste? ( ) Yes (•) No

8. Neighbour and Community Consultation

Have you consulted your neighbours or the local community about the proposal? (•) Yes ( ) No

If Yes, please provide details:

Full details are included in the attached Planning Statement.

9. Council Employee / Member

Is the applicant or agent related to any member of staff or elected member of the council? (•) Yes ( ) No

If Yes, please provide details:

The Applicant and the Agent are both members of SMDC staff. The Applicant has been granted authority to submit planning applications on the Council's behalf and details of this authority are included in the attached Planning Statement.

10. Materials

Please state what materials (including type, colour and name) are to be used externally (if applicable):

10. Materials (continued)

Others - description:

Type of other material: CCTV apparatus

Description of *existing* materials and finishes:

None.

Description of *proposed* materials and finishes:

8m tall steel column with dome-mounted CCTV camera.

Are you supplying additional information on submitted plan(s)/drawing(s)/design and access statement? (•) Yes ( ) No

If Yes, please state references for the plan(s)/drawing(s)/design and access statement:

Please see attached Planning Statement.

11. Vehicle Parking

Please provide information on the existing and proposed number of on-site parking spaces:

Type of vehicle	Existing number of spaces	Total proposed (including spaces retained)	Difference in spaces

12. Foul Sewage

Please state how foul sewage is to be disposed of:

Mains sewer ☐ Package treatment plant ☐ Unknown ☐

Septic tank ☐ Cess pit ☐

Other

None required.

Are you proposing to connect to the existing drainage system? ( ) Yes (•) No ( ) Unknown

13. Assessment of Flood Risk

Is the site within an area at risk of flooding? Refer to the Environment Agency's Flood Map showing flood zones 2 and 3 and consult Environment Agency standing advice and your local planning authority requirements for information as necessary. ( ) Yes (•) No

If Yes, you will need to submit an appropriate flood risk assessment to consider the risk to the proposed site.

Is your proposal within 20 metres of a watercourse (e.g. river, stream or beck)? ( ) Yes (•) No

Will the proposal increase the flood risk elsewhere? ( ) Yes (•) No

How will surface water be disposed of?

☐ Sustainable drainage system ☒ Main sewer ☐ Pond/lake

☐ Soakaway ☐ Existing watercourse

14. Biodiversity and Geological Conservation

To assist in answering the following questions refer to the guidance notes for further information on when there is a reasonable likelihood that any important biodiversity or geological conservation features may be present or nearby and whether they are likely to be affected by your proposals.

Having referred to the guidance notes, is there a reasonable likelihood of the following being affected adversely or conserved and enhanced within the application site, OR on land adjacent to or near the application site:

a) Protected and priority species

( ) Yes, on the development site ( ) Yes, on land adjacent to or near the proposed development (•) No

b) Designated sites, important habitats or other biodiversity features

( ) Yes, on the development site ( ) Yes, on land adjacent to or near the proposed development (•) No

c) Features of geological conservation importance

( ) Yes, on the development site ( ) Yes, on land adjacent to or near the proposed development (•) No

15. Existing Use

Please describe the current use of the site:

Existing footpath at entrance to car park.

Is the site currently vacant? ○ Yes ◉ No

Does the proposal involve any of the following:

Land which is known to be contaminated? ○ Yes ◉ No

Land where contamination is suspected for all or part of the site? ○ Yes ◉ No

A proposed use that would be particularly vulnerable to the presence of contamination? ○ Yes ◉ No

Application advice
If you have said Yes to any of the above, you will need to submit an appropriate contamination assessment.

16. Trees and Hedges

Are there trees or hedges on the proposed development site? ○ Yes ◉ No

And/or: Are there trees or hedges on land adjacent to the proposed development site that could influence the development or might be important as part of the local landscape character? ○ Yes ◉ No

If Yes to either or both of the above, you will need to provide a full Tree Survey with accompanying plan before your application can be determined. Your Local Planning Authority should make clear on its website what the survey should contain, in accordance with the current 'BS5837: Trees in relation to construction - Recommendations'

17. Trade Effluent

Does the proposal involve the need to dispose of trade effluents or waste? ○ Yes ◉ No

18. Residential Units

Does your proposal include the gain or loss of residential units? ○ Yes ◉ No

19. All Types of Development: Non-residential Floorspace

Does your proposal involve the loss or gain or change of use of non-residential floorspace? ○ Yes ◉ No

20. Employment

If known, please complete the following information regarding employees:

	Full-time	Part-time	Equivalent number of full-time
Existing employees	0	0	0
Proposed employees	0	0	0

21. Hours of Opening

If known, please state the hours of opening for each non-residential use proposed:

Use	Monday to Friday Start Time	Monday to Friday End Time	Saturday Start Time	Saturday End Time	Sunday and Bank Holidays Start Time	Sunday and Bank Holidays End Time	Not Known

22. Site Area

What is the site area? 01.00 sq.metres

23. Industrial or Commercial Processes and Machinery

Please describe the activities and processes which would be carried out on the site and the end products including plant, ventilation or air conditioning. Please include the type of machinery which may be installed on site:

CCTV camera to cover part of the town centre of Cheadle in conjunction with the existing CCTV camera network. Full details are included in the attached Planning Statement.

Is the proposal for a waste management development? ○ Yes ◉ No

24. Hazardous Substances

Is any hazardous waste involved in the proposal? ○ Yes ◉ No

25. Site Visit

Can the site be seen from a public road, public footpath, bridleway or other public land? ◉ Yes ○ No

If the planning authority needs to make an appointment to carry out a site visit, whom should they contact? (Please select only one)

◉ The agent ○ The applicant ○ Other person

26. Certificates (Certificate B)

Certificate of Ownership - Certificate B
Town and Country Planning (General Development Procedure) Order 1995 Certificate under Article 7

I certify/The applicant certifies that : Have the applicant has given the requisite notice to everyone else (as listed below) who, on the day 21 days before the date of this application, was the owner *(owner is a person with a freehold interest or leasehold interest with at least 7 years left to run)* of any part of the land or building to which this application relates.

Notice recipient	Date notice served
Name: Somerfield Stores Ltd. Number: 0 Suffix: Street: Whitchurch Lane Locality: Whitchurch Town: Bristol Postcode: BS14 0TJ	20/01/2009
Name: Somerfield Stores Ltd. Number: 0 Suffix: Street: Well Street Locality: Town: Cheadle Postcode: ST10 1YP	20/01/2009

Title: Mr First name: Clive Surname: Rhodes
Person role: Applicant Declaration date: 20/01/2009 ☒ Declaration made

26. Certificates (Agricultural Holdings Certificate)

Agricultural Holding Certificate
Town and Country Planning (General Development Procedure) Order 1995 Certificate under Article 7

Agricultural Land Declaration - You Must Select Either A or B

(A) None of the land to which the application relates is, or is part of an agricultural holding. ◉

(B) I have/The applicant has given the requisite notice to every person other than myself/the applicant who, on the day 21 days before the date of this application, was a tenant of an agricultural holding on all or part of the land to which this application relates, as listed below: ○

Title: Mr First Name: Clive Surname: Rhodes
Person role: Applicant Declaration date: 20/01/2009 ☒ Declaration Made

27. Declaration

I/we hereby apply for planning permission/consent as described in this form and the accompanying plans/drawings and additional information. ☒

Date 20/01/2009

STAFFORDSHIRE
moorlands
DISTRICT COUNCIL

ACHIEVING · EXCELLENCE

Proposed CCTV camera at Somerfield car park, Cheadle.

App. No. PP-00566257

Planning Statement

January 2009

S.M. Higton, B.Eng (Hons), Engineering Officer,
Property Services

Staffordshire Moorlands District Council,
Moorlands House,
Stockwell Street,
Leek,
Staffordshire.
ST13 6HQ

Contents

1. Introduction 3
2. Background information 3
3. Proposed CCTV camera location 4
4. Equipment and installation details 4
5. Legal issues 4
5.1 Land ownership 4
5.2 Authority to make planning applications 5
6. Summary 5

Appendices

A. Scheme drawings
B. Site photographs
C. Equipment details
D. Other supporting information

1. Introduction

The purpose of this report is to provide background information relating to the proposed installation of a new CCTV camera at Somerfield car park in Cheadle and to support the planning application by describing the need for a camera in the proposed location, the proposed equipment details and any legal implications.

2. Background information

The District Council currently operates a District-wide CCTV scheme comprising 31 cameras in the three towns of Biddulph, Cheadle and Leek as well as the five villages of Blythe Bridge, Brown Edge, Cheddleton, Forsbrook and Werrington. At present, the Biddulph and Leek cameras are monitored at Alsager (under license from Congleton Borough Council) by a third party contractor. The cameras at Cheadle and in the villages are monitored on the Council's behalf at Alton Towers. The whole of the CCTV system is currently maintained under a separate contract.

The intention is to extend the existing scheme to 40 cameras by the installation of four new closed circuit television cameras (CCTV) at:

- High Street, Leek.
- Somerfield car park, Cheadle.
- South Moorlands Leisure Centre, Cheadle.
- Biddulph Valley Leisure Centre, Biddulph.

and five new automatic number plate recognition (ANPR) cameras at:

- St. Edward Street/Mill Street junction, Leek.
- Broad Street/Compton junction, Leek.
- Stockwell Street/Broad Street junction, Leek.
- Chapel Street/Tape Street junction, Cheadle.
- Knypersley, Biddulph.

Tenders for the provision and installation of all nine new cameras, together with a new digital recording system and the maintenance of the existing and new cameras, equipment and infrastructure are due to be received by November 13th 2008. The maintenance contract will be for an initial period of five years with a possible extension of two years and is expected to commence in April 2009.

It is anticipated that the newly extended scheme will be monitored at a single facility based in Chapel-en-le-Frith in the High Peak District of Derbyshire. As this facility is not located within the Moorlands, a new remote viewing and recording capability will be supplied to Leek Police Station as part of the contract.

The extended CCTV scheme will be managed by Staffordshire Moorlands District Council and will operate under a strict Code of Conduct which is already used throughout the District and can be downloaded from the District Council's website.

3. Proposed CCTV camera location

This planning application relates to the proposed CCTV camera at Somerfield car park, Cheadle only and the other eight new sites will be covered by separate applications.

A location plan showing the proposed location of the new camera is included in Appendix A with site photographs at Appendix B.

The District Council's Property Services and Community Safety teams work closely with the Police, County Council and a range of other agencies to reduce crime and the fear of crime within the Staffordshire Moorlands.

The requirement for expansion of the CCTV system as a whole has been identified by means of a detailed review of camera locations throughout the District, including an analysis of where the main crime and disorder problems occur. Specific details of crime and disorder problems are classed as Restricted and therefore cannot be included in this document.

The results of the review have been used to identify specific locations, taking into account the technical implications and the need to comply with the relevant Data Protection and Human Rights legislation. The proposed location of this camera, selected as a result of consultation with the Police and other agencies, will provide coverage of the Somerfield car park as well as the entrance to the site from Well Street, overlapping with the coverage of the existing camera at Well Street car park.

The site is approximately 85m outside the town centre conservation area and 155m from the nearest listed building. Informal pre-application consultation with the District Council's Conservation Officer has been carried out and it has been confirmed that Conservation Area and Listed Building consent in respect of this application are not required.

4. Equipment and installation details

The proposal is to install the camera within a vandal resistant dome mounted on an 8m column within the verge at the side of the car park entrance.

The camera will be powered by means of an un-metered supply from the nearby street lighting circuit. Data will be transmitted to the monitoring centre via fibre-optic cables.

A summary of the specification for the proposed camera and column and copies of the manufacturer's information are attached at Appendix C.

5. Legal issues

5.1 Land ownership

The proposed location of the new CCTV camera is within a landscaped strip alongside the entrance to the car park serving the Somerfield supermarket. The car park, landscape strip and access road are all owned by Somerfield.

A plan showing the proposed site and the extent of District Council land ownership (outlined in blue) is included in Appendix A.

In July 2008 the Somerfield Group was sold to the Co-operative Group but the companies' respective websites indicate that corporate business is still being dealt with by the individual companiesss.

Somerfield have been contacted by telephone and email with regards to the proposed camera and a copy of the email is included in Appendix D. To date, Somerfield have not commented on the proposals.

In accordance with the requirements of Section 26 of the planning application form, the appropriate Notice under Article 6 of the Town & Country Planning (General Permitted Development Procedure) Order 1995 was served on Somerfield Stores Ltd. on January 20th 2009 and copies of the Notice and covering letter are included in Appendix D.

5.2 Authority to make planning applications

As stated in Section 9 of the Planning Application form, Clive Rhodes, Head of Property Services has the delegated authority to submit planning applications on behalf of SMDC. This was granted by Cabinet 7th January 2003, as follows:-

> "174. TOWN AND COUNTRY PLANNING GENERAL REGULATIONS 1992
>
> - PLANNING APPLICATIONS
>
> Applications made by the Council for development of its own land were covered by the above regulations whereby the application was made by the Cabinet under the Property Portfolio. This could give rise to the situation whereby any Member of the Cabinet who was also a Member of the Planning Applications Committee might have to declare a personal and prejudicial interest in the application and could not speak or vote on it at the Planning Applications Committee.
>
> To avoid this situation, it was recommended that the making of such applications be delegated to the Director of Resources and Regeneration.
>
> DECISION: That the making of all applications for planning permission under Regulation 3 of the Town and Country Planning General Regulations 1992 be delegated to the Director of Resources and Regeneration/ Head of Property Services.
>
> REASON: To avoid compromising the position of Cabinet Members who may also be Members of the Planning Applications Committee when that Committee considers applications made by the Council under the regulations."

6. Summary

The District Council works with several partner organisations to reduce crime and the fear of crime within the Staffordshire Moorlands. The proposed installation of a new CCTV camera at Somerfield car park in Cheadle will support this aim by increasing the CCTV coverage of Cheadle town centre as part of a District-wide improvement scheme.

Appendix A

Location plan and scheme drawings

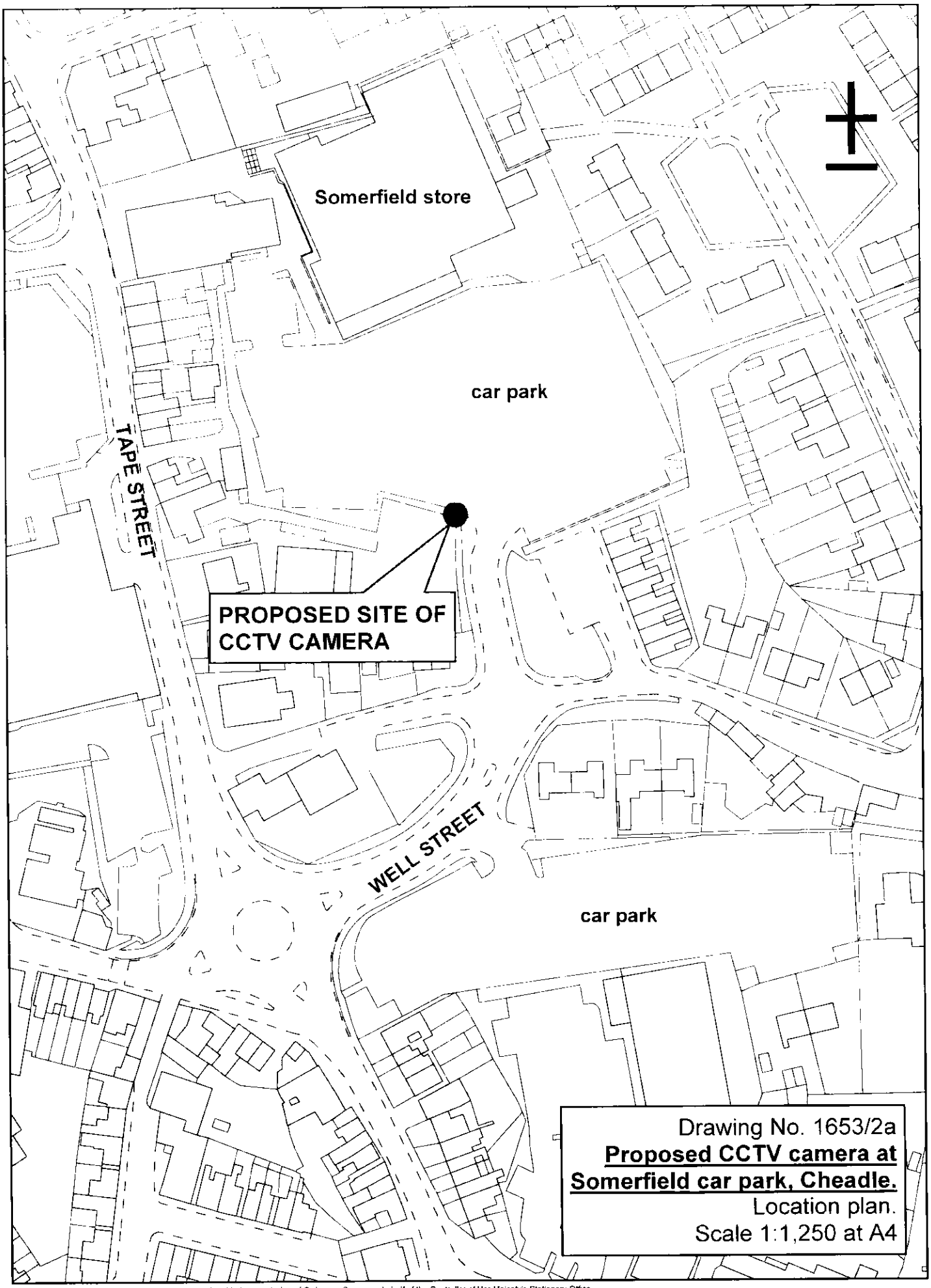

Drawing No. 1653/2a

Proposed CCTV camera at Somerfield car park, Cheadle.

Location plan.

Scale 1:1,250 at A4

This map is reproduced from Ordnance Survey material with the permission of Ordnance Survey on behalf of the Controller of Her Majesty's Stationery Office
© Crown copyright. Unauthorised reproduction infringes Crown copyright and may lead to prosecution or civil proceedings. Staffordshire Moorlands District Council. Licence No. 100018384. 2009

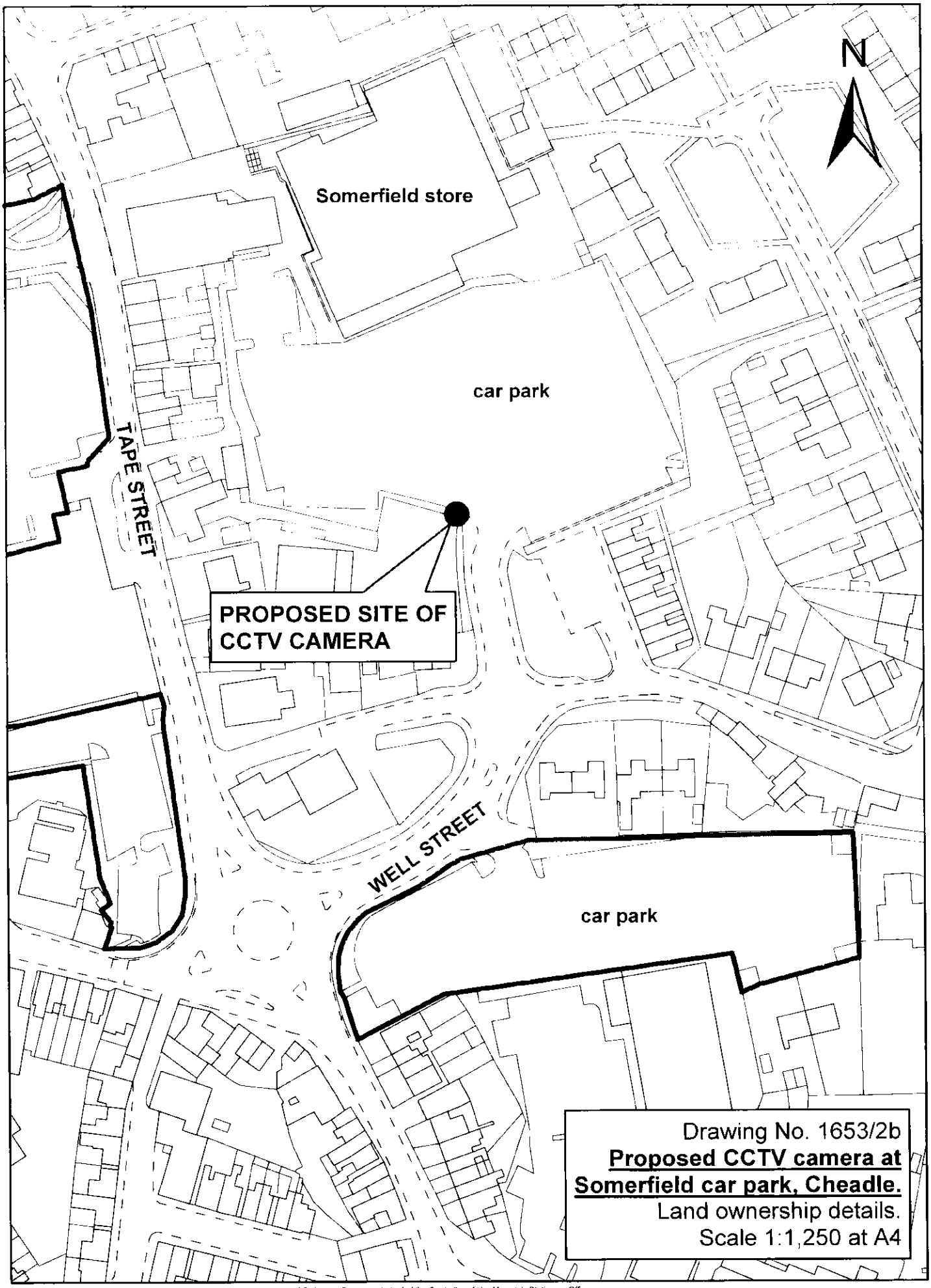

Drawing No. 1653/2b

Proposed CCTV camera at Somerfield car park, Cheadle.

Land ownership details.

Scale 1:1,250 at A4

This map is reproduced from Ordnance Survey material with the permission of Ordnance Survey on behalf of the Controller of Her Majesty's Stationery Office © Crown copyright. Unauthorised reproduction infringes Crown copyright and may lead to prosecution or civil proceedings. Staffordshire Moorlands District Council. Licence No. 100018384. 2008

Appendix B

Site Photographs

Proposed CCTV camera at

Somerfield car park, Cheadle.

Photographs taken October 21st 2008.



Proposed site,
viewed from Well Street
entrance (the south).

Proposed site, viewed
from car park
(the east).



Appendix C

Equipment details

Proposed Specification for new Closed Circuit Television (CCTV) cameras.

Element	Variables	Details
Camera	Type	½" colour/mono
	Resolution	>540TVL
	Sensitivity	>0.3 lux
	Housing	Vandal resistant dome
	Wiper	Yes
	Heater	Yes
	Mounting	Pole
	Pole Type	WEC TC or Altron equivalent, 8m
Telemetry	System Control	RS485
	Colour On/Off	Yes
	Shutter Speed	Yes
	Automatic/ANPR Mode	No
PT Head	Speed	Variable C/R
	Presets	Yes
Lens	Focal Length	To meet PSDB identification as below
	Filter	Colour/IR
	Iris	Auto
Alarms	Pole	No
	Housing	No
	Cabinet	No
Lighting	IR Source	No
	Control	No
Lightning Protection	Air Terminal	No
	Surge Protection	Mains, video & control
	Earth Rod	Yes
PSDB	Identification (120%) @ 35m	

Technical Specification

aW1545UP

Mode No	Height A metres	Pole O/B	Payload capacity	Rated max wind load	Cabinet height above ground S	Base plate size H		Holding down bolt centres I		Holding down bolt size		300 CAB pole weight	350 CAB pole weight	400 CAB pole weight	450 CAB pole weight	500 CAB pole weight	600 CAB pole weight
						300 350 CAB	400 600 CAB	300 350 CAB	400 600 CAB	300 350 CAB	400 600 CAB						
AW1545/4	4	168	75kgs	0.75m²	1300	510	630[1]	450	550	M20 x 300	M24 x 300	151	164	189	202	215	228
AW1545/5	5	168	75kgs	0.75m²	1300	510	630[1]	450	550	M20 x 300	M24 x 300	173	186	211	224	237	250
AW1545/6	6	168	75kgs	0.75m²	1300	510	630[1]	450	550	M20 x 300	M24 x 300	217	230	255	268	281	294
AW1545/7	7	168	60kgs	0.60m²	1300	510	630[1]	450[2]	550	M20 x 300	M24 x 300	244	257	282	295	308	321
AW1545/8	8	168	75kgs	0.50m²	1300	630	630[1]	450	550	M24 x 300	M24 x 300	271	284	309	322	335	348
AW1545/8HD	8	219	75kgs	0.75m²	1300	630	630[1]	450[2]	550	M24 x 400	M24 x 400	302	315	340	353	366	379
AW1545/9	9	219	56kgs	0.60m²	1650	630	630[1]	550[2]	550	M24 x 400	M24 x 400	-	398	411	424	437	450
AW1545/10	10	219	50kgs	0.50m²	1650	630	630[1]	550[2]	550	M24 x 400	M24 x 400	-	467	480	500	520	540
AW1545/10HD	10	273	75kgs	0.75m²	1650	-	800[1]	-	700[2]	M27 x 600	M27 x 600	-	-	-	620	640	660
AW1545/12	12	273	75kgs	0.75m²	1650	-	800[1]	-	700[2]	M27 x 600	M27 x 600	-	-	-	706	726	746
AW1545/15	15	273	50kgs	0.50m²	1650	-	800[1]	-	700[2]	M27 x 600	M27 x 600	-	-	-	835	855	875

400[1] Cabinet supplied as standard on both static and tilt down units

aW1545UP Tilt Down

						400 500 CAB	600 CAB	450 500 CAB	600 CAB	Pole rear clearance when tilting F						
AW1545/4 TD	4	168	75Kgs	0.75m²	1625	630[2]		550[2]		M24 x 300	1150	318	344	370	396	422	468
AW1545/6 TD	6	168	60Kgs	0.75m²	1625	630[2]		550[2]		M24 x 300	1150	358	384	410	436	462	508
AW1545/8 TD	8	168	50Kgs	0.75m²	1625	630[2]		550[2]		M24 x 300	1150	466	472	498	524	550	596
AW1545/10 TD	10	219	30Kgs	0.50m²	2650	630[2]		550[2]		M24 x 400	2150	-	-	626	6565	686	736
AW1545/12 TD	12	219	20Kgs	0.50m²	2650	630[2]		550[2]		M24 x 400	2150	-	-	678	713	748	803

* 4-8m Tilt Down Units baseplate buried 75mm below ground level
* 10-12m Tilt Down Units baseplate buried 200mm below ground level

Options

	PT No
Decorative banding	/B
Screw in Swan Neck adaptor	/SN
Double door	/DD
Double door with washer bottle conduit	/DD/W
Access cover plate and cable restraining bar	/AC
Cabinet base size	/300
Cabinet base size	/350
Cabinet base size	/400
Cabinet base size	/450
Cabinet base size	/500
Cabinet base size	/600
Altron locks in 4-point arrangement	/A4P

Warm Part Time

Use With	Width
AW1545/4-7m inclusive	DW1000/45
AW1545/7-9m inclusive	DW1500/45
AW1545/10-12m inclusive	DW2500/45

Example Part No.
AW1545/6/500/B/SN

All camera mounting plates are DIA 127 with 8 No Ø 8.5 equi-spaced on 101.6 PCD.
Ø 40 thro' column spacer

For accessories refer to page 47

BASE SIZES IN TECHICAL SECTION

aW1545UP TD

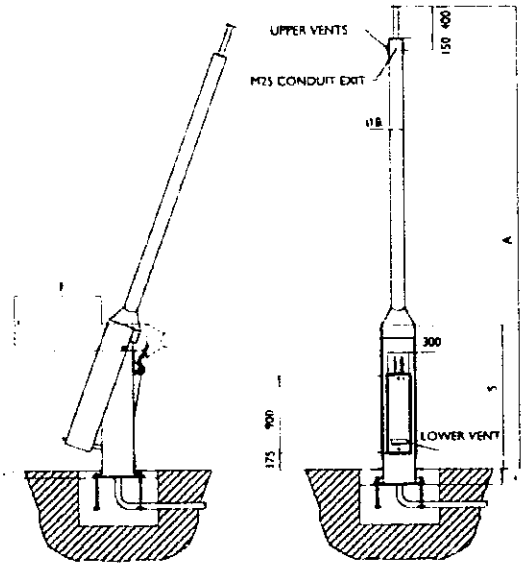

aW1545UP

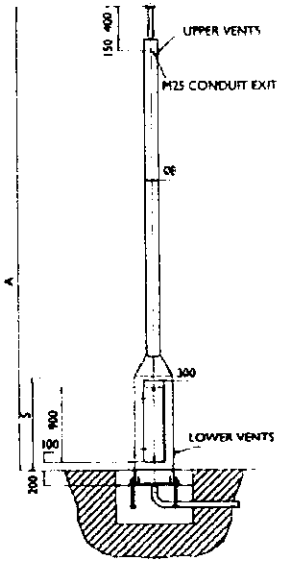

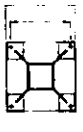

*Door height up to 8m pole height is 900mm. Over 8m 1000mm

Pole is fixed in the vertical position using 2 no. bolts and locked with internal nuts - has the facility to be padlocked internally to stop unauthorised tilting.

Poles complete with treated equipment mounting board inside compartment. Earthing lugs within pole & on door

These Features in Equipment & Construction are Common across the Range

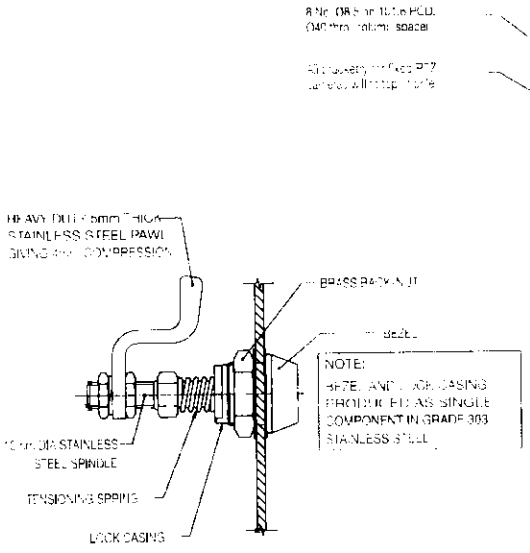

ALTRON STANDARD LOCK

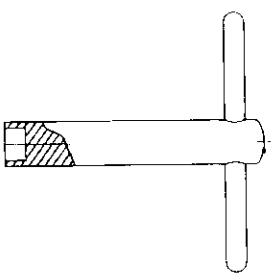

HEAVY DUTY 'T' HANDLE KEY

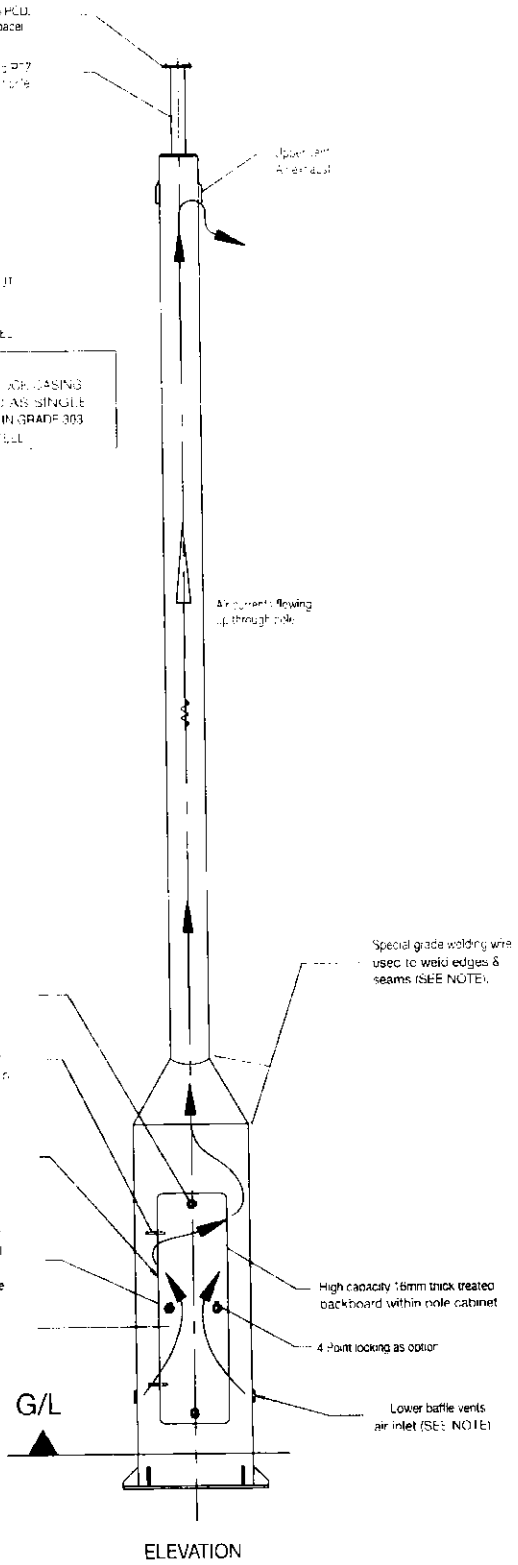

ELEVATION

FOR FURTHER DETAILS ON THE ALTRON LOCK
SEE DATA SHEET
ASL/41/04

FOR THE FULL RANGE OF DOOR & LOCK OPTIONS
SEE DATA SHEET
UDL/41/04

CONVECTION VENTING
Air within pole is warmed - either by equipment within pole or by solar gain - warm air rises up pole & draws cool air through lower vents - this cools equipment and limits condensation.

SPECIAL GRADE WELDING WIRE
When seam welding with standard welding wire after grinding flush a build up of galvanising occurs on the weld seam in the galvanising process known as weld growth. To stop this unsightly seam or the need to dress down (sometimes this dressing goes through the galvanising to bare metal) Altron uses a special grade of wire which does not cause weld growth, therefore improving the galvanising finish.

BAFFLE VENTS
A labyrinth type baffle inlet vent is used as standard - this stops water ingress (jets of water from all directions) but more importantly stops flammable liquid from being squirted into the pole cabinet

Please note - that the flush doors and baffle venting to IP55 are being phased in at time of going to print and are not yet standard to all products.

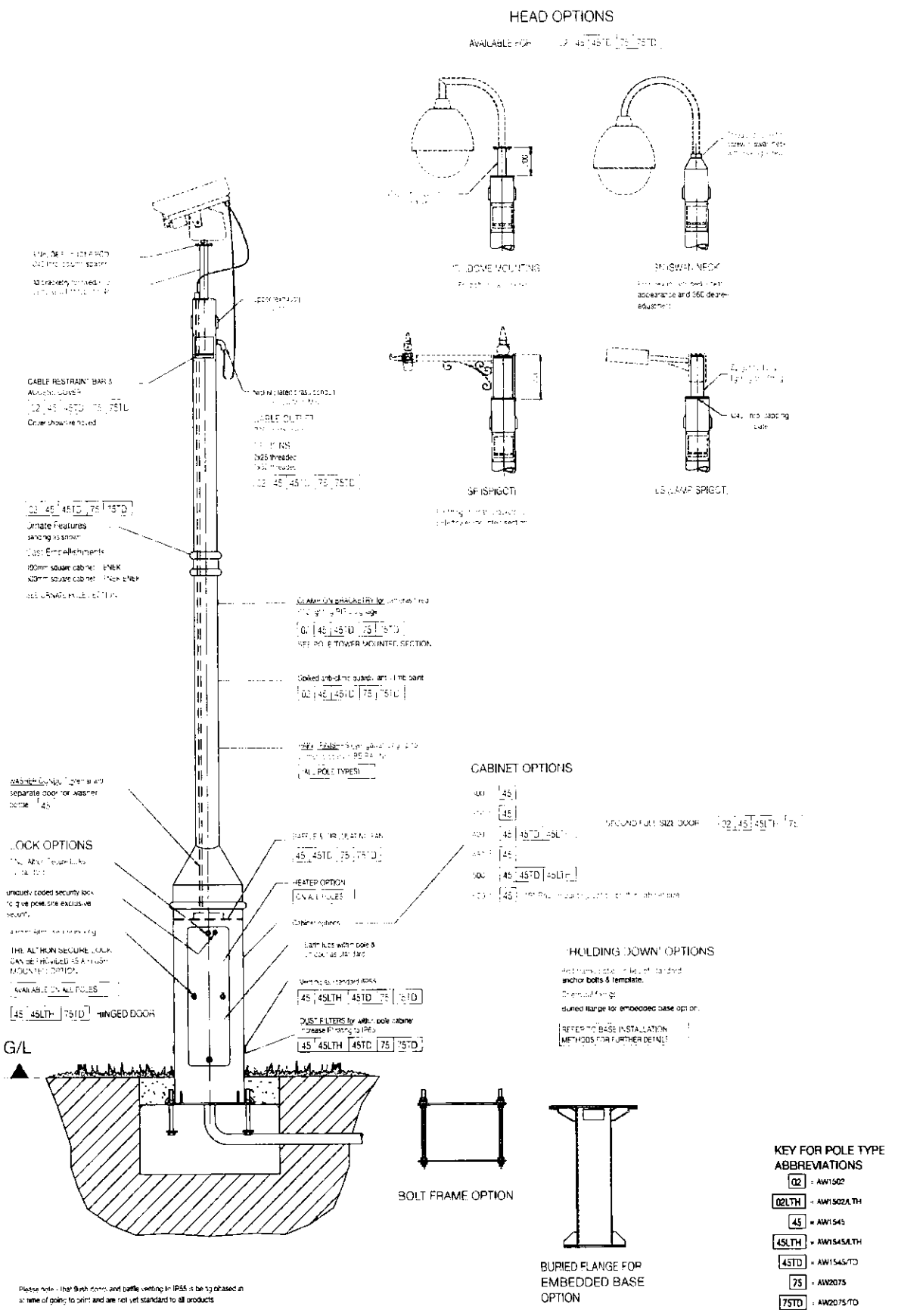
HEAD OPTIONS
AVAILABLE FOR 02 45 45TD 75 75TD
SPISPIGOT
LS LAMP SPIGOT
CABLE RESTRAINT BAR & ACOUSTIC COVER
02 45 45TD 75 75TD
Cover shown removed
Upper Hatch
Nickel plated brass conduit
CABLE OUTLET
OPTIONS
0x25 threaded
02 45 45TD 75 75TD
02 45 45TD 75 75TD
Ornate Features
sanding as shown
Cast Embellishments
100mm square cabinet ENEK
300mm square cabinet ENEK ENEK
SEE ORNATE POLE SECTION
CLAMP ON BRACKETRY for
02 45 45TD 75 75TD
SEE POLE TOWER MOUNTED SECTION
Spiked anti-climb guards and climb paint
02 45 45TD 75 75TD
HAND FINISH
(ALL POLE TYPES)
WASHER CONDUIT
separate door for washer bottle 45
LOCK OPTIONS
uniquely coded security lock to give pole site exclusive security
THE ALTRON SECURE LOCK CAN BE PROVIDED AS A FLUSH MOUNTED OPTION
AVAILABLE ON ALL POLES
45 45LTH 75TD HINGED DOOR
BAFFLE & FOR VIBRATION FAN
45 45TD 75 75TD
HEATER OPTION
ON ALL POLES
Cabinet options
Earth lugs within pole & cabinet as standard
Venting as standard IP55
45 45LTH 45TD 75 75TD
DUST FILTERS for within pole cabinet increase IP rating to IP65
45 45LTH 45TD 75 75TD
CABINET OPTIONS
400 45
45
400 45 45TD 45LTH
45
500 45 45TD 45LTH
45
SECOND FULL SIZE DOOR 02 45 45LTH 75
HOLDING DOWN OPTIONS
anchor bolts & template.
buried flange for embedded base option.
REFER TO BASE INSTALLATION METHODS FOR FURTHER DETAILS
G/L
BOLT FRAME OPTION
BURIED FLANGE FOR EMBEDDED BASE OPTION
KEY FOR POLE TYPE ABBREVIATIONS
02 = AW1502
02LTH = AW1502/LTH
45 = AW1545
45LTH = AW1545/LTH
45TD = AW1545/TD
75 = AW2075
75TD = AW2075/TD
Please note - that flush doors and baffle venting to IP55 is being phased in at time of going to print and are not yet standard to all products

Appendix D

Other supporting information

Higton, Susan

From: Higton, Susan
Sent: 14 January 2009 15:04
To: 'david.price@somerfield.co.uk'
Cc: Macdonald, Iain
Subject: FW: Proposed CCTV camera at Somerfield, Cheadle, Staffordshire.

Dear Mr. Price,

Further to my email of November 20th (attached below), I wonder whether you have had chance to consider our proposal to install a new CCTV camera on land at your Somerfield store in Cheadle, Staffordshire and whether you have any questions or comments on the scheme? If possible, I would like to address any concerns you have before submitting the planning application next week.

I look forward to hearing from you.

Kind regards.

Sue Higton
Engineering Officer, Property Services,
Staffordshire Moorlands District Council.

Tel. 01538-395400 ext.4209
Fax. 01538-395509
E-mail: susan.higton@staffsmoorlands.gov.uk

-----Original Message-----
From: Higton, Susan
Sent: 20 November 2008 15:41
To: 'david.price@somerfield.co.uk'
Cc: Macdonald, Iain; Rhodes, Clive
Subject: Proposed CCTV camera at Somerfield, Cheadle, Staffordshire.

Dear Mr. Price.

Further to your recent conversation with Iain Macdonald of this department, Iain has asked me to contact you with further information about our proposals for a new CCTV camera at your Somerfield store in Cheadle, Staffordshire.

Staffordshire Moorlands District Council currently operates a District-wide CCTV system and the intention is to expand this system by installing 9 new cameras. The Somerfield site has been identified following consultation with the Police and other agencies and further information on the proposals, including a location plan and photographs of the proposed installation site, is included in the attached document.



sm722-background-Somerfield.pd...

According to a recent Land Registry search, the site for the proposed camera is owned by Somerfield and I would be grateful if you could consider our proposals and provide any comments.

Subject to receiving your approval of the proposed CCTV installation, I intend to submit individual planning applications for all nine proposed cameras within the next few weeks and will be serving notice on Somerfield as part of the application process. Any legal matters relating to the installation could then be discussed separately.

If you would like to discuss the proposals in more detail or would like to arrange a site meeting, please contact me at the address below. Thank your for your assistance.

Kind regards,

Sue Higton, ***B. Eng. (Hons)***
Engineering Officer, Property Services.

Staffordshire Moorlands District Council,
Moorlands House.
Stockwell Street,
Leek.
Staffordshire.
ST13 6HQ

Tel. 01538-395400 ext.4209
Fax. 01538-395509
E-mail: susan.higton@staffsmoorlands.gov.uk

STAFFORDSHIRE
Moorlands
DISTRICT COUNCIL
ACHIEVING · EXCELLENCE

Simon W. Baker B Ed MBA MILAM
Chief Executive

Dealt with by: Mrs. S.M. Higton, Engineering Officer
Direct Dial: (01538) 395400 ext 4209
Fax. No: (01538) 395509
E-mail: susan.higton@staffsmoorlands.gov.uk

Your Ref:
Our Ref: SM722-2/SMH
Date: 20 January 2009

Somerfield Stores Ltd.,
Somerfield House,
Whitchurch Lane,
Whitchurch,
Bristol.
BS14 0TJ

Dear Sirs,

Re: Proposed CCTV camera at Somerfield car park, Cheadle, ST10 1YP.

The District Council wishes to extend the Cheadle town centre CCTV scheme by installing a new CCTV camera at your Somerfield car park at Well Street, Cheadle, Staffordshire. As the new CCTV column is to be located within your property, please find enclosed the Notice Under Article 6 of Application for Planning Permission.

Also enclosed is a copy of the Planning Statement which accompanies the planning application and includes details on the proposed siting and operation of the CCTV camera.

Please note that we have previously contacted Mr. David Price by telephone and email but no response has been received.

For information purposes, a copy of this letter and supporting information will be forwarded to your Cheadle store.

If you wish to discuss any aspects of the scheme or require any further information, please contact me on 01538-395400 ext.4209.

Yours sincerely,

S.M. HIGTON
Engineering Officer

STAFFORDSHIRE
Moorlands
DISTRICT COUNCIL

ACHIEVING · EXCELLENCE

Simon W. Baker B Ed MBA MILAM
Chief Executive

Dealt with by: Mrs. S.M. Higton, Engineering Officer
Direct Dial: (01538) 395400 ext.4209
Fax. No.: (01538) 395509
E-mail: susan.higton@staffsmoorlands.gov.uk

Your Ref.:
Our Ref.: SM722-2/SMH
Date: 20 January 2009

The Manager,
Somerfield Stores Ltd.,
Well Street,
Cheadle,
Staffordshire.
ST10 1YP

Dear Sir/Madam,

Re: Proposed CCTV camera at Somerfield car park, Cheadle, ST10 1YP.

The District Council wishes to extend the Cheadle town centre CCTV scheme by installing a new CCTV camera at your Somerfield car park at Well Street, Cheadle, Staffordshire.

As the new CCTV column is to be located within your property, a Notice Under Article 6 of Application for Planning Permission has been sent to your head office in Bristol and a copy of the Notice and covering letter are enclosed for your information.

If you wish to discuss any aspects of the scheme or require any further information, please contact me on 01538-395400 ext.4209.

Yours sincerely,

S.M. HIGTON
Engineering Officer

Town and Country Planning (General Permitted Development Procedure) Order 1995 NOTICE UNDER ARTICLE 6 APPLICATION FOR PLANNING PERMISSION

(Notice 1: This notice is to be printed and served on individuals if Certificate B or C is completed)

Proposed development at:

Name or flat number	
Property number or name	Somerfield car park
Street	Well Street
Locality	
Town	Cheadle
County	Staffordshire
Postal town	
Postcode	ST10 1YP

Take notice that application is being made by:

Organisation name		Staffordshire Moorlands District Council		
Applicant name	**Title**	Mr.	**Forename**	Clive
	Surname	Rhodes		

For planning permission to:

Description of proposed development

Proposed installation of CCTV camera at Somerfield car park, Well Street, Cheadle, ST10 1YP. (ref. PP-00566257)

Local Planning Authority to whom the application is being submitted:	Staffordshire Moorlands District Council
Local Planning Authority address:	Moorlands House, Stockwell Street, Leek, Staffordshire. ST13 6HQ

Any owner of the land or tenant who wishes to make representations about this application, should write to the council within 21 days of the date of this notice.

Signatory

Signatory	**Title**	Mr.	**Forename**	Clive
	Surname	Rhodes		

Signature

C M Rhodes

Date (dd-mm-yyyy) 20-01-2009

Statement of owners' rights: The grant of planning permission does not affect owners' rights to retain or dispose of their property, unless there is some provision to the contrary in an agreement or lease.

Statement of agricultural tenants' rights: The grant of planning permission for non-agricultural development may affect agricultural tenants' security of tenure.

'Owner' means a person having a freehold interest or a leasehold interest the unexpired term of which is not less than seven years.
'Tenant' means a tenant of an agricultural holding any part of which is comprised in the land.

Once completed this form needs to be served on the owner(s) or tenant(s)

Print Form

Appendix C

Equipment details

Proposed Specification for new Closed Circuit Television (CCTV) cameras.

Element	Variables	Details
Camera	Type	½" colour/mono
	Resolution	>540TVL
	Sensitivity	>0.3 lux
	Housing	Vandal resistant dome
	Wiper	Yes
	Heater	Yes
	Mounting	Pole
	Pole Type	WEC TC or Altron equivalent, 8m
Telemetry	System Control	RS485
	Colour On/Off	Yes
	Shutter Speed	Yes
	Automatic/ANPR Mode	No
PT Head	Speed	Variable C/R
	Presets	Yes
Lens	Focal Length	To meet PSDB identification as below
	Filter	Colour/IR
	Iris	Auto
Alarms	Pole	No
	Housing	No
	Cabinet	No
Lighting	IR Source	No
	Control	No
Lightning Protection	Air Terminal	No
	Surge Protection	Mains, video & control
	Earth Rod	Yes
PSDB	Identification (120%) @ 35m	

Technical Specification

AW1545UP

Model No	Height in metres A	Pole OD B	Payload appr capacity	Recom max appr windload m	Cabinet height above ground S	Base plate size H 300 CAB	Base plate size H 400 CAB	Holding down bolt centres I 300 CAB	Holding down bolt centres I 400 CAB	Holding down bolt size 300 CAB	Holding down bolt size 400 CAB	300 CAB pole weight	350 CAB pole weight	400 CAB pole weight	450 CAB pole weight	500 CAB pole weight	600 CAB pole weight
AW1545/4	4	168	75kgs	0.75m²	1300	510¹	630¹	450¹	550¹	M20 x 300	M24 x 300	151	164	189	202	215	228
AW1545/5	5	168	75kgs	0.75m²	1300	510¹	630¹	450¹	550¹	M20 x 300	M24 x 300	173	186	211	224	237	250
AW1545/6	6	168	75kgs	0.75m²	1300	510¹	630¹	450¹	550¹	M20 x 300	M24 x 300	217	230	255	268	281	294
AW1545/7	7	168	60kgs	0.60m²	1300	510¹	630¹	450¹	550¹	M20 x 300	M24 x 300	244	257	282	295	308	321
AW1545/8	8	168	75kgs	0.50m²	1300	630¹	630¹	450¹	550¹	M24 x 300	M24 x 300	271	284	309	322	335	348
AW1545/8HD	8	219	75kgs	0.75m²	1300	630¹	630¹	450¹	550¹	M24 x 400	M24 x 400	302	315	340	353	366	379
AW1545/9	9	219	56kgs	0.60m²	1650	630¹	630¹	550¹	550¹	M24 x 400	M24 x 400	-	398	411	424	437	450
AW1545/10	10	219	50kgs	0.50m²	1650	630¹	630¹	550¹	550¹	M24 x 400	M24 x 400	-	467	480	500	520	540
AW1545/10HD	10	273	75kgs	0.75m²	1650	-	800¹	-	700¹	M27 x 600	M27 x 600	-	-	-	620	640	660
AW1545/12	12	273	75kgs	0.75m²	1650	-	800¹	-	700¹	M27 x 600	M27 x 600	-	-	-	706	726	746
AW1545/15	15	273	50kgs	0.50m²	1650	-	800¹	-	700¹	M27 x 600	M27 x 600	-	-	-	835	855	875

400¹ Cabinet supplied as standard on both static and tilt down units

AW1545UP TILTDOWN

						400 CAB	500 CAB	400 - 500 CAB	Pole rear clearance when tilted						
AW1545/4 TD	4	168	75Kgs	0.75m²	1625	630¹	550¹	M24 x 300	1150	318	344	370	396	422	468
AW1545/6 TD	6	168	60Kgs	0.75m²	1625	630¹	550¹	M24 x 300	1150	358	384	410	436	462	508
AW1545/8 TD	8	168	50Kgs	0.75m²	1625	630¹	550¹	M24 x 300	1150	466	472	498	524	550	596
AW1545/10 TD	10	219	30Kgs	0.50m²	2650	630¹	550¹	M24 x 400	2150	-	-	626	6565	686	736
AW1545/12 TD	12	219	20Kgs	0.50m²	2650	630¹	550¹	M24 x 400	2150	-	-	678	713	748	803

* 4-8m Tilt Down Units baseplate buried 75mm below ground level
* 10-12m Tilt Down Units baseplate buried 200mm below ground level

Options

	Part No
Decorative banding	/B
Screw in Swan Neck adaptor	/SN
Double door	/DD
Double door with washer bottle conduit	/DD/W
Access cover plate and cable restraining bar	/AC
Cabinet base size	/300
Cabinet base size	/350
Cabinet base size	/400
Cabinet base size	/450
Cabinet base size	/500
Cabinet base size	/600
Altron locks in 4-point arrangement	/A4P

Use With	Winch Part No
AW1545/4-7m inclusive	DW1000/45
AW1545/7-9m inclusive	DW1500/45
AW1545/10-12m inclusive	DW2500/45

Example Part No.
AW1545/6/500/B/SN

All camera mounting plates are DIA 127 with 8 No Ø 8.5 equi-spaced on 101.6 PCD.
Ø 40 thro' column spacer
For accessories refer to page 47

BASE SIZES IN TECHICAL SECTION

AW1545UP TD

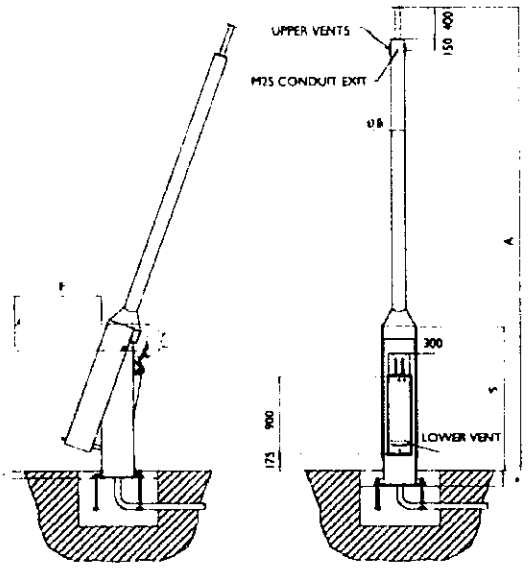

AW1545UP

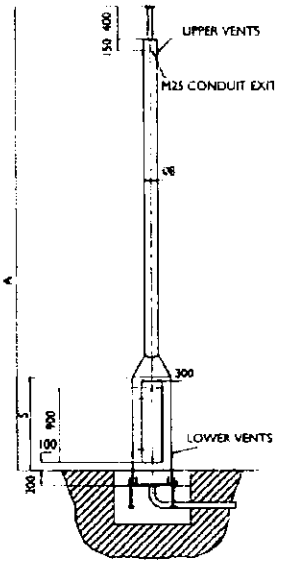

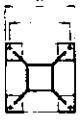

*Door height up to 8m pole height is 900mm. Over 8m 1000mm

Pole is fixed in the vertical position using 2 no bolts and locked with internal nuts - has the facility to be padlocked internally to stop unauthorised tilting

Poles complete with treated equipment mounting board inside compartment. Earthing lugs within pole & on door

These Features in Equipment & Construction are Common across the Range

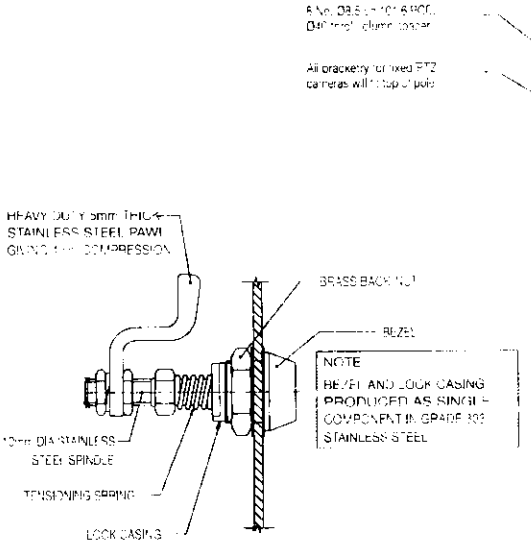

ALTRON STANDARD LOCK

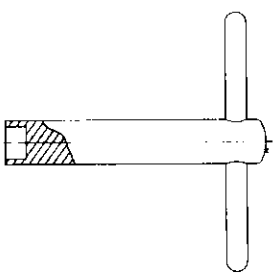

HEAVY DUTY 'T' HANDLE KEY

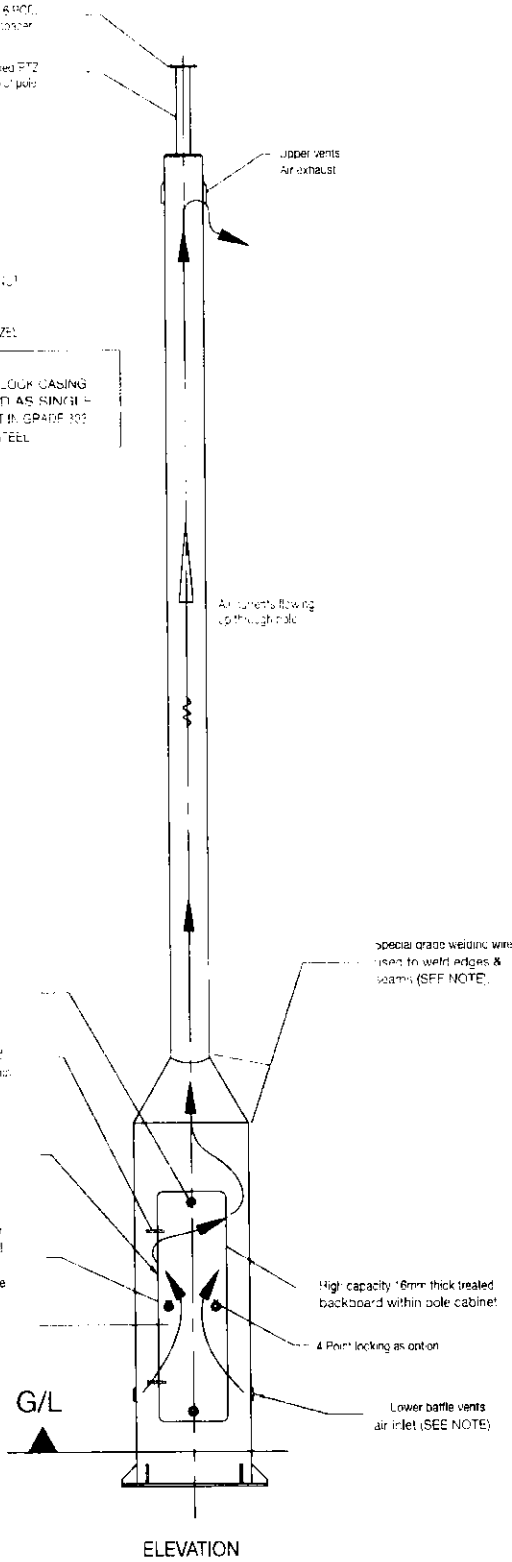

ELEVATION

FOR FURTHER DETAILS ON THE ALTRON DOOR SEE DATA SHEET ASL/41/04

FOR THE FULL RANGE OF DOOR & LOCK OPTIONS SEE DATA SHEET UDL/41/04

CONVECTION VENTING
Air within pole is warmed - either by equipment within pole or by solar gain - warm air rises up pole & draws cool air through lower vents - this cools equipment and limits condensation.

SPECIAL GRADE WELDING WIRE
When seam welding with standard welding wire after grinding flush a build up of galvanising occurs on the weld seam in the galvanising process known as weld growth. To stop this unsightly seam or the need to dress down (sometimes this dressing goes through the galvanising to bare metal) Altron uses a special grade of wire which does not cause weld growth, therefore improving the galvanising finish.

BAFFLE VENTS
A labyrinth type baffle inlet vent is used as standard - this stops water ingress (jets of water from all directions) but more importantly stops flammable liquid from being squirted into the pole cabinet

Please note - that the flush doors and baffle venting to IP55 are being phased in at time of going to print and are not yet standard to all products.

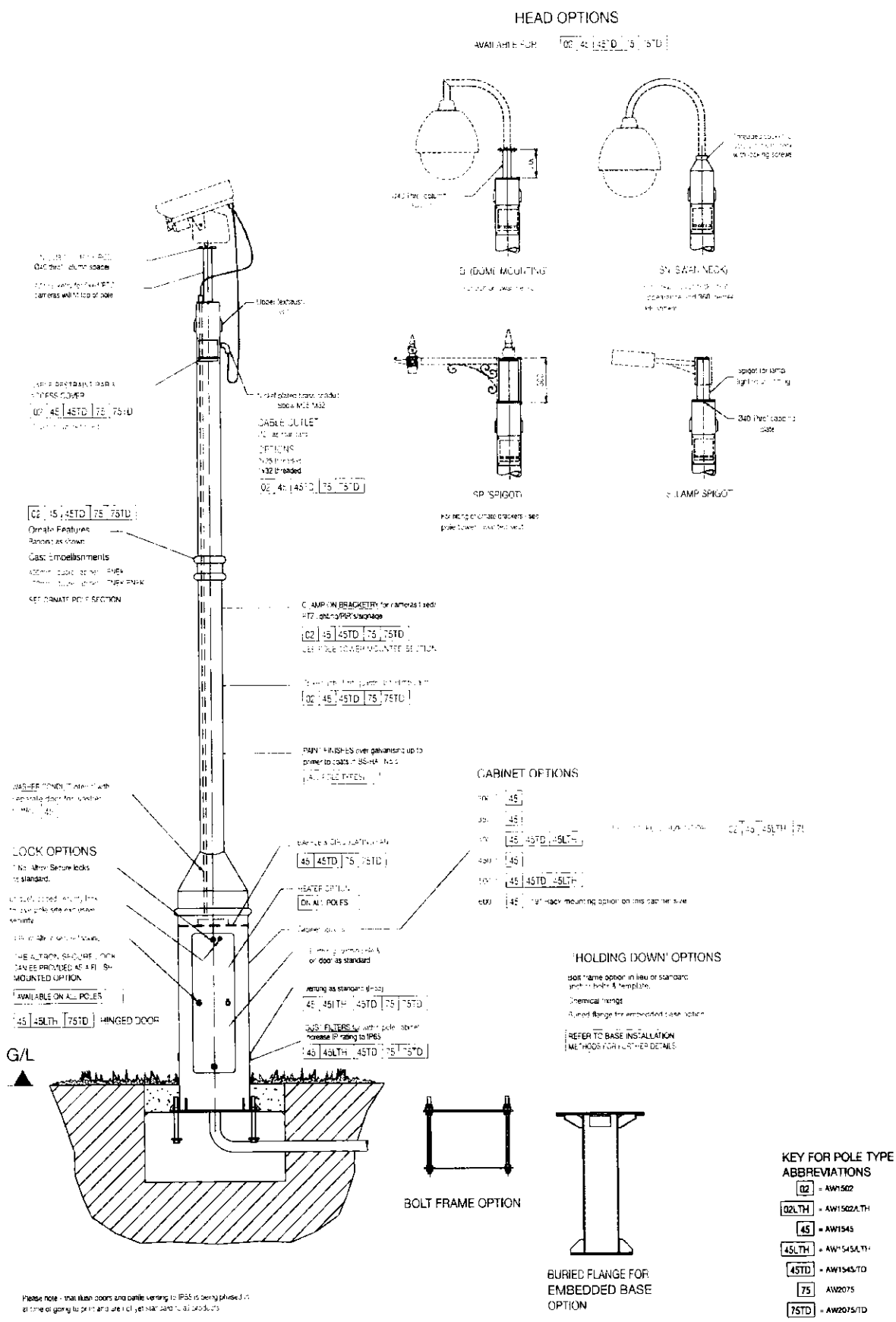
HEAD OPTIONS
AVAILABLE FOR 02 45 45TD 75 75TD
D (DOME MOUNTING)
SN (SWAN NECK)
SP (SPIGOT)
S (LAMP SPIGOT)
Ø40 thro' column space
Upper textbaus
CABLE OUTLET
OPTIONS
Ø32 threaded
02 45 45TD 75 75TD
Ornate Features
Cast Embellishments
SEE ORNATE POLE SECTION
CLAMP ON BRACKETRY for cameras fixed/PTZ, lighting/PRI's/signage
02 45 45TD 75 75TD
PAINT FINISHES over galvanising up to primer to coats in BS-HA
CABINET OPTIONS
45 45TD 45LTH
45 45TD 75 75TD
HEATER OPTION
ON ALL POLES
LOCK OPTIONS
Not Alltrex Secure locks as standard.
THE ALTRON SECURE LOCK CAN BE PROVIDED AS A FLUSH MOUNTED OPTION
AVAILABLE ON ALL POLES
45 45LTH 75TD HINGED DOOR
Venting as standard (Hoop)
45 45LTH 45TD 75 75TD
DUST FILTERS for within pole cabinet increase IP rating to IP65
45 45LTH 45TD 75 75TD
'HOLDING DOWN' OPTIONS
Bolt frame option in lieu of standard anchor bolts & template.
Chemical fixings
Buried flange for embedded base option
REFER TO BASE INSTALLATION METHODS FOR FURTHER DETAILS
G/L
BOLT FRAME OPTION
BURIED FLANGE FOR EMBEDDED BASE OPTION
KEY FOR POLE TYPE ABBREVIATIONS
02 = AW1502
02LTH = AW1502/LTH
45 = AW1545
45LTH = AW1545/LTH
45TD = AW1545/TD
75 AW2075
75TD = AW2075/TD
Please note - that flush doors and baffle venting to IP65 is being phased in at time of going to print and are not yet standard to all products

Appendix D

Other supporting information

Higton, Susan

From: Higton, Susan
Sent: 14 January 2009 15:04
To: 'david.price@somerfield.co.uk'
Cc: Macdonald, Iain
Subject: FW: Proposed CCTV camera at Somerfield, Cheadle, Staffordshire.

Dear Mr. Price,

Further to my email of November 20th (attached below), I wonder whether you have had chance to consider our proposal to install a new CCTV camera on land at your Somerfield store in Cheadle, Staffordshire and whether you have any questions or comments on the scheme? If possible, I would like to address any concerns you have before submitting the planning application next week.

I look forward to hearing from you.

Kind regards,

Sue Higton
Engineering Officer, Property Services,
Staffordshire Moorlands District Council.

Tel. 01538-395400 ext.4209
Fax. 01538-395509
E-mail: susan.higton@staffsmoorlands.gov.uk

-----Original Message-----
From: Higton, Susan
Sent: 20 November 2008 15:41
To: 'david.price@somerfield.co.uk'
Cc: Macdonald, Iain; Rhodes, Clive
Subject: Proposed CCTV camera at Somerfield, Cheadle, Staffordshire.

Dear Mr. Price,

Further to your recent conversation with Iain Macdonald of this department, Iain has asked me to contact you with further information about our proposals for a new CCTV camera at your Somerfield store in Cheadle, Staffordshire.

Staffordshire Moorlands District Council currently operates a District-wide CCTV system and the intention is to expand this system by installing 9 new cameras. The Somerfield site has been identified following consultation with the Police and other agencies and further information on the proposals, including a location plan and photographs of the proposed installation site, is included in the attached document.



sm722-background-Somerfield.pd...

According to a recent Land Registry search, the site for the proposed camera is owned by Somerfield and I would be grateful if you could consider our proposals and provide any comments.

Subject to receiving your approval of the proposed CCTV installation, I intend to submit individual planning applications for all nine proposed cameras within the next few weeks and will be serving notice on Somerfield as part of the application process. Any legal matters relating to the installation could then be discussed separately.

If you would like to discuss the proposals in more detail or would like to arrange a site meeting, please contact me at the address below. Thank your for your assistance.

Kind regards,

Sue Higton*, *B. Eng. (Hons)
Engineering Officer, Property Services.

Staffordshire Moorlands District Council,
Moorlands House.
Stockwell Street,
Leek,
Staffordshire.
ST13 6HQ

Tel. 01538-395400 ext.4209
Fax. 01538-395509
E-mail: susan.higton@staffsmoorlands.gov.uk

STAFFORDSHIRE
Moorlands
DISTRICT COUNCIL
ACHIEVING · EXCELLENCE

Simon W. Baker B Ed MBA MILAM
Chief Executive

Dealt with by: Mrs. S.M. Higton, Engineering Officer
Direct Dial: (01538) 395400 ext.4209
Fax. No.: (01538) 395509
E-mail: susan.higton@staffsmoorlands.gov.uk

Your Ref.:
Our Ref.: SM722-2/SMH
Date: 20 January 2009

Somerfield Stores Ltd.,
Somerfield House,
Whitchurch Lane,
Whitchurch,
Bristol.
BS14 0TJ

Dear Sirs,

Re: Proposed CCTV camera at Somerfield car park, Cheadle, ST10 1YP.

The District Council wishes to extend the Cheadle town centre CCTV scheme by installing a new CCTV camera at your Somerfield car park at Well Street, Cheadle, Staffordshire. As the new CCTV column is to be located within your property, please find enclosed the Notice Under Article 6 of Application for Planning Permission.

Also enclosed is a copy of the Planning Statement which accompanies the planning application and includes details on the proposed siting and operation of the CCTV camera.

Please note that we have previously contacted Mr. David Price by telephone and email but no response has been received.

For information purposes, a copy of this letter and supporting information will be forwarded to your Cheadle store.

If you wish to discuss any aspects of the scheme or require any further information, please contact me on 01538-395400 ext.4209.

Yours sincerely,

S.M. HIGTON
Engineering Officer

STAFFORDSHIRE
Moorlands
DISTRICT COUNCIL
ACHIEVING · EXCELLENCE

Simon W. Baker B.Ed. MBA. MILAM
Chief Executive

Dealt with by: Mrs. S.M. Higton, Engineering Officer
Direct Dial: (01538) 395400 ext.4209
Fax. No.: (01538) 395509
E-mail: susan.higton@staffsmoorlands.gov.uk

Your Ref.:
Our Ref.: SM722-2/SMH
Date: 20 January 2009

The Manager,
Somerfield Stores Ltd.,
Well Street,
Cheadle,
Staffordshire.
ST10 1YP

Dear Sir/Madam,

Re: Proposed CCTV camera at Somerfield car park, Cheadle, ST10 1YP.

The District Council wishes to extend the Cheadle town centre CCTV scheme by installing a new CCTV camera at your Somerfield car park at Well Street, Cheadle, Staffordshire.

As the new CCTV column is to be located within your property, a Notice Under Article 6 of Application for Planning Permission has been sent to your head office in Bristol and a copy of the Notice and covering letter are enclosed for your information.

If you wish to discuss any aspects of the scheme or require any further information, please contact me on 01538-395400 ext.4209.

Yours sincerely,

S.M. HIGTON
Engineering Officer

Town and Country Planning (General Permitted Development Procedure) Order 1995 NOTICE UNDER ARTICLE 6 APPLICATION FOR PLANNING PERMISSION

(Notice 1: This notice is to be printed and served on individuals if Certificate B or C is completed)

Proposed development at:

Name or flat number

Property number or name Somerfield car park

Street Well Street

Locality

Town Cheadle

County Staffordshire

Postal town

Postcode ST10 1YP

Take notice that application is being made by:

Organisation name Staffordshire Moorlands District Council

Applicant name **Title** Mr. **Forename** Clive

Surname Rhodes

For planning permission to:

Description of proposed development

Proposed installation of CCTV camera at Somerfield car park, Well Street, Cheadle, ST10 1YP.
(ref. PP-00566257)

Local Planning Authority to whom the application is being submitted: Staffordshire Moorlands District Council

Local Planning Authority address: Moorlands House,
Stockwell Street,
Leek,
Staffordshire.
ST13 6HQ

Any owner of the land or tenant who wishes to make representations about this application, should write to the council within 21 days of the date of this notice.

Signatory:

Signatory **Title** Mr. **Forename** Clive

Surname Rhodes

Signature C. M. Rhodes

Date (dd-mm-yyyy) 20-01-2009

Statement of owners' rights: The grant of planning permission does not affect owners' rights to retain or dispose of their property, unless there is some provision to the contrary in an agreement or lease.

Statement of agricultural tenants' rights: The grant of planning permission for non-agricultural development may affect agricultural tenants' security of tenure.

'Owner' means a person having a freehold interest or a leasehold interest the unexpired term of which is not less than seven years.
'Tenant' means a tenant of an agricultural holding any part of which is comprised in the land.

Once completed this form needs to be served on the owner(s) or tenant(s) Print Form

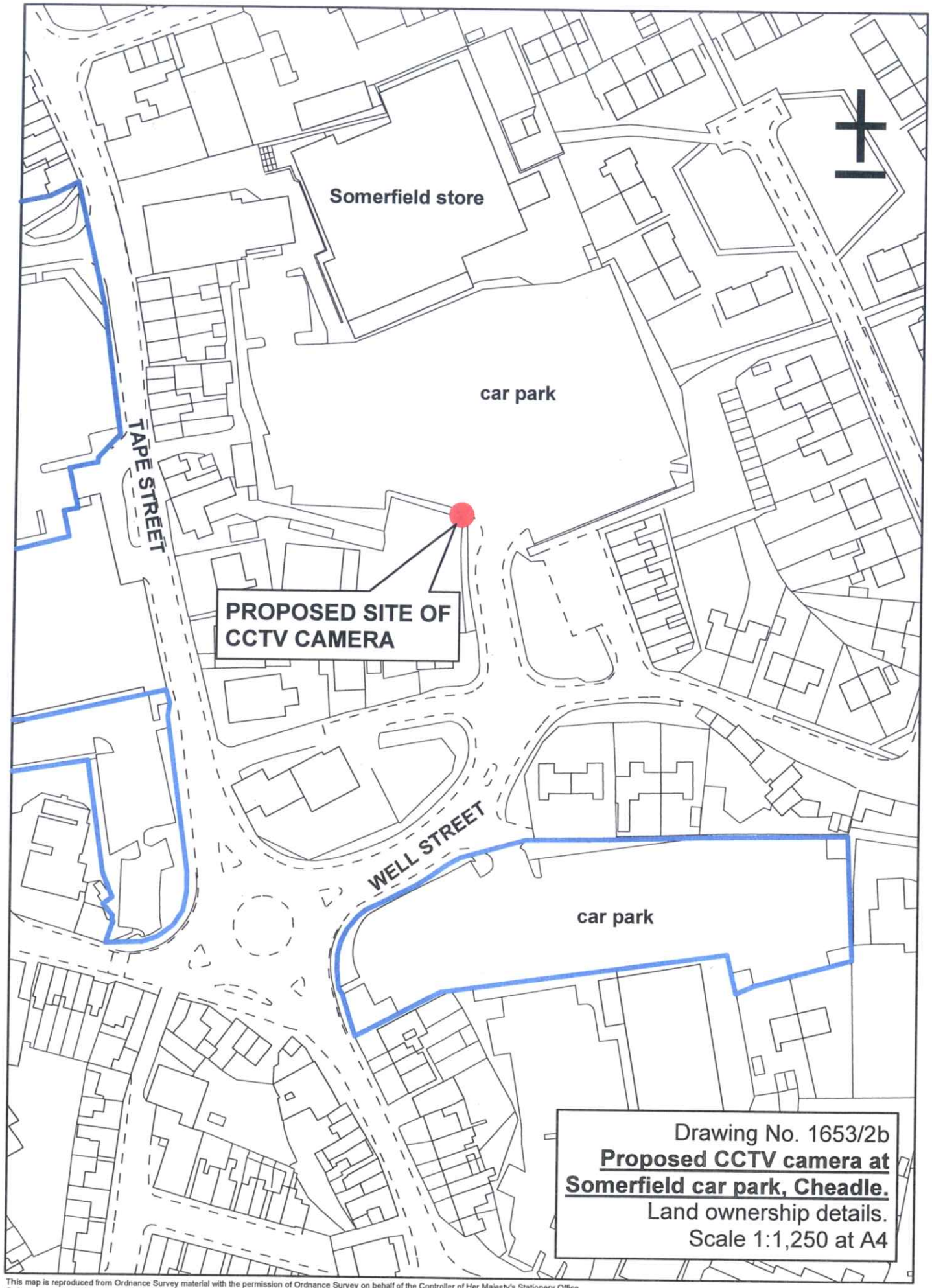

Drawing No. 1653/2b

Proposed CCTV camera at Somerfield car park, Cheadle.

Land ownership details.

Scale 1:1,250 at A4

This map is reproduced from Ordnance Survey material with the permission of Ordnance Survey on behalf of the Controller of Her Majesty's Stationery Office.
© Crown copyright. Unauthorised reproduction infringes Crown copyright and may lead to prosecution or civil proceedings. Staffordshire Moorlands District Council. Licence No. 100018384. 2009.

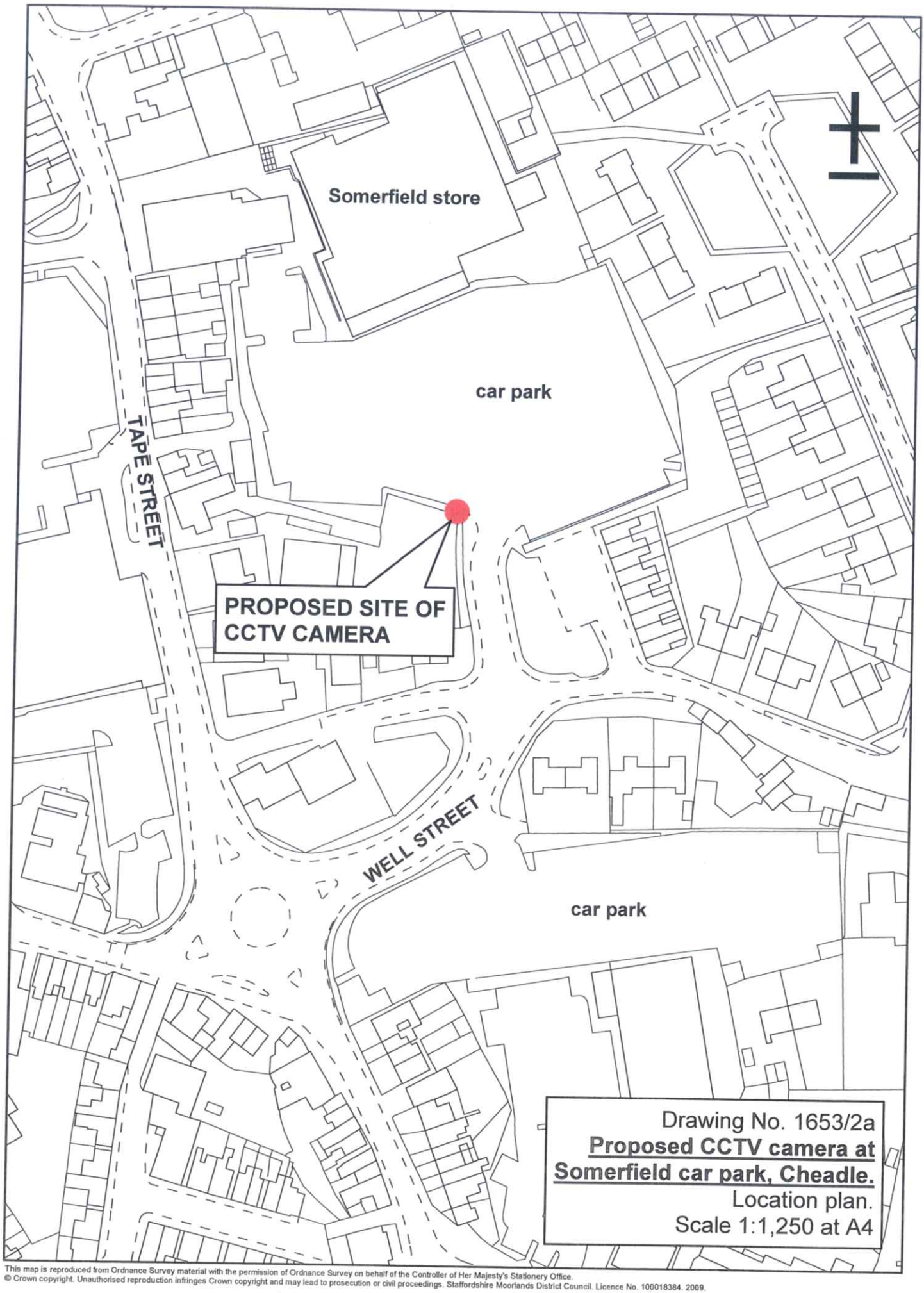

Drawing No. 1653/2a

Proposed CCTV camera at Somerfield car park, Cheadle.

Location plan.

Scale 1:1,250 at A4

This map is reproduced from Ordnance Survey material with the permission of Ordnance Survey on behalf of the Controller of Her Majesty's Stationery Office.
© Crown copyright. Unauthorised reproduction infringes Crown copyright and may lead to prosecution or civil proceedings. Staffordshire Moorlands District Council. Licence No. 100018384. 2009.