PART No. 537059 SHT 1 OF 2 | DRAWING SCALE (mm)

DO NOT SCALE REMOVE SHARP EDGES IF IN DOUBT ASK WELD MESHES IN ST ENSURE MINIMUM DISTORTION

CR No & DATE	REVISION	ISS No
24/4122 19.1.95 PJS	REDRAWN ON CAD CONCRETE VOLUMES RECALCULATED	4
24/4210 4.5.95	AGITATOR PAD ADDED MDP	5
24/4405 8.3.95 MDP	LEVELLING ROD QTY'S HALVED. CHORD LENGTHS MODIFIED TO SUIT	6
24/5124 2.4.98 MDP	TOLERANCE AND BS NOTES ADDED	7
24/5316 MDP 25.9.98	LEVELLING FOOS DELETED SEALER STRIP DELETED MASTIC FILLET REPOSITIONED WEDGE DELETED	8
24/5332 MDP 30.9.98.	NOTE 3 ADDED CONSTRUCTION JOINT RE-ADDED BASE CONCRETE ADD TOTAL VOLUMES MODIFIED	9
24/5405 M.N. 16.12.98	PART No.s REMOVED. MESH DETAILS AND CONCRETE BASE ASSY Pt. NUMBERS REMOVED FROM TABLE. MESH SIZE AND No. OFF ADDED.	10
24/5631 07/12/01 M.P.	SCHEDULE AMENDED TO SUIT SERIES 1400.	11
CN/7318 PCD 5.10.01	40 COVER WAS 33 FOR BASE REINFORCING. INNER FOOTINGS MESH ADDED.	12

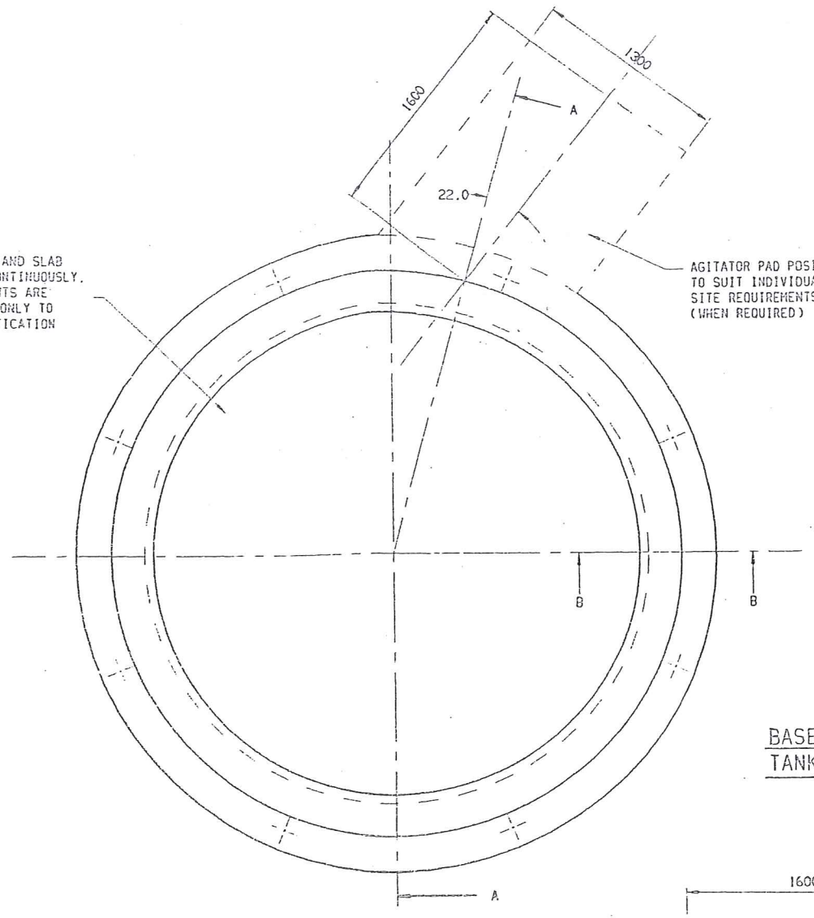

CONCRETE FOOTING AND SLAB SHOULD BE LAID CONTINUOUSLY. CONSTRUCTION JOINTS ARE PERMISSIBLE, BUT ONLY TO PERMASTORE SPECIFICATION (SEE VIEW 'C').

AGITATOR PAD POSITION TO SUIT INDIVIDUAL SITE REQUIREMENTS (WHEN REQUIRED)

NOTE: SEE TABLE FOR ITEMS MARKED THUS *

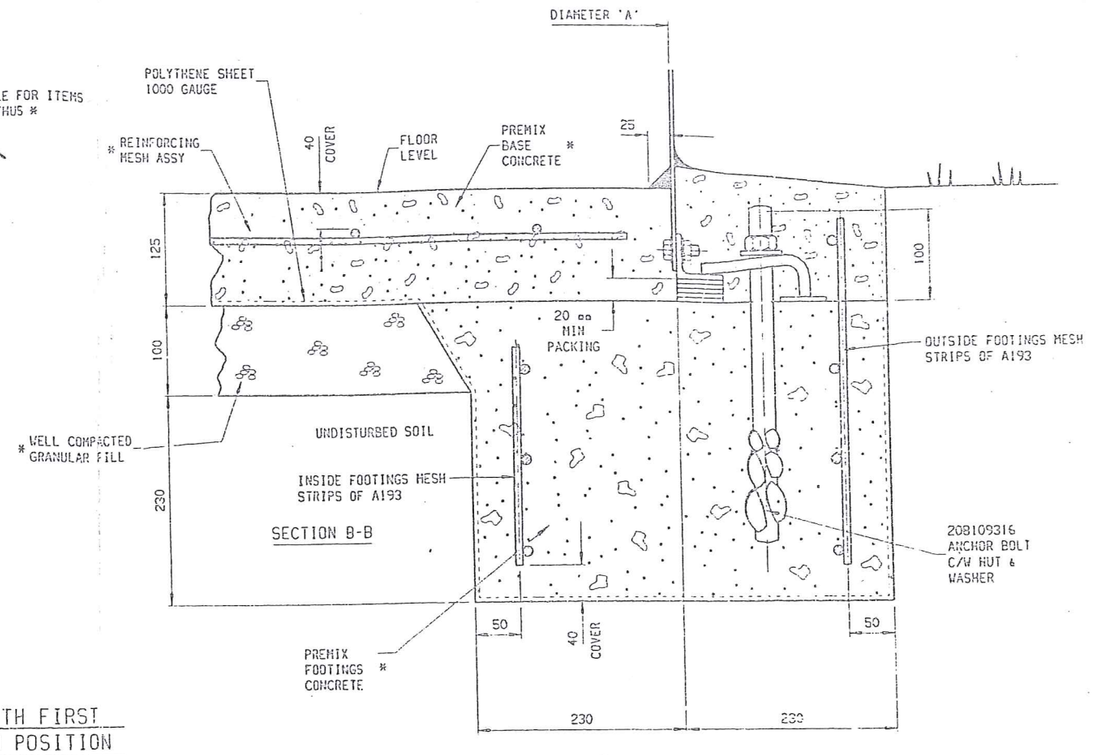

BASE LAID WITH FIRST TANK RING IN POSITION

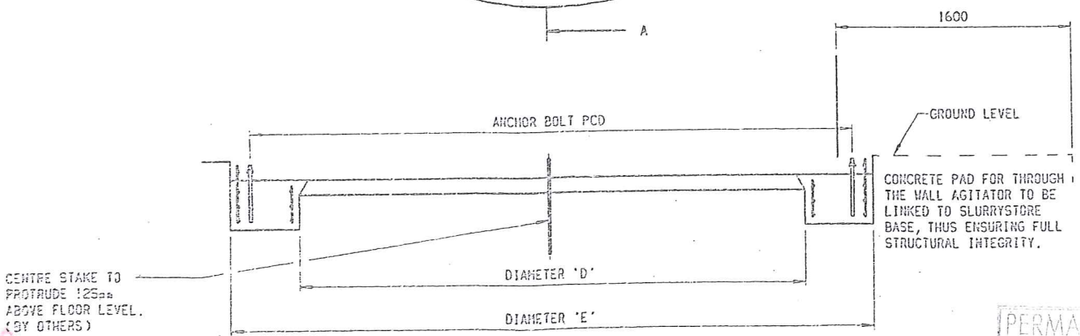

SECTION A-A

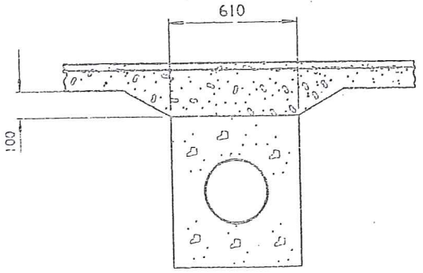

PIPE TRENCH DETAIL

SECTION THROUGH PIPE TRENCH (WHERE INCLUDED) SHOWING LOCALLY STRENGTHENED FLOOR. SUBJECT OT LOCAL CONDITIONS

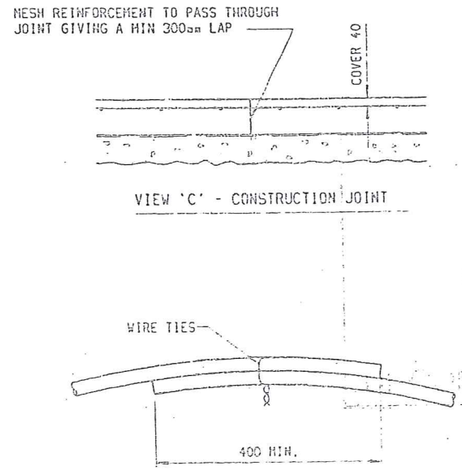

TYPICAL FOOTINGS MESH JOINT

FOOTINGS MESHES TO BE BENT TO APPROXIMATE DIAMETER REQUIRED ON SITE, AND WIRED TOGETHER AS SHOWN.

NOTE: MESH SIZE #4.8㎜ @ 4M

NOMINAL TANK DIA. 'A' / m	11	14	17	20	22	25	28	31	34	36	39	42	45	48	50	53	56	59	62
No. OF SHEETS PER RING	5	5	6	7	8	9	10	11	12	13	14	15	16	17	18	19	20	21	22
"ROW DIA." 'B' METRES	3.416	4.259	5.123	5.977	6.821	7.685	8.539	9.393	10.247	11.100	11.954	12.808	13.662	14.516	15.370	16.224	17.078	17.931	18.785
No. OFF MESH PANELS	2.0	2.0	2.0	4.0	5.0	6.0	7.0	8.0	9.0	11.0	12.0	14.0	16.0	18.0	20	22.0	24.0	27.0	29.0
MESH SPECIFICATION	A193	A193	A193	A193	A193	A193	A193	A193	A193	A193	A193	A193	A193	A193	A193	A193	A193	A193	A193
ANCHOR BOLTS No. OFF	8	10	12	14	16	18	20	22	24	26	28	30	32	34	36	38	40	42	44
ANCHOR BOLTS PCD / m	3.076	4.665	5.350	6.157	7.011	7.865	8.719	9.573	10.427	11.280	12.134	12.988	13.842	14.696	15.550	16.404	17.258	18.111	18.965
ANCHOR BOLTS CHORD / m	1.375	1.375	1.375	1.370	1.365	1.359	1.354	1.352	1.351	1.350	1.351	1.352	1.354	1.357	1.362	1.365	1.354	1.353	1.353
FOOTINGS O/D 'D' / m	2.955	3.804	4.654	5.517	6.371	7.225	8.079	8.933	9.787	10.649	11.494	12.348	13.202	14.056	14.910	15.764	16.618	17.583	18.391	19.245
FOOTINGS I/D 'E' / m	3.076	4.729	5.584	6.437	7.291	8.145	8.999	9.853	10.707	11.560	12.414	13.268	14.122	14.976	15.830	16.684	17.538	18.391	19.245
GRANULAR FILL VOLUME / m³	5.7	1.1	1.7	2.4	3.2	4.1	5.1	6.3	7.5	8.9	10.4	12.0	13.7	15.5	17.5	19.5	21.7	24.0	26.4
FOOTINGS CONCRETE VOL / m³	1.6	2.9	2.6	2.9	3.3	3.7	4.1	4.5	4.9	5.3	5.7	6.1	6.5	6.9	7.3	7.7	8.1	8.6	9.0
BASE CONCRETE VOLUME / m³	1.1	1.8	2.6	3.5	4.5	5.6	7.2	8.7	10.3	12.1	14.0	16.1	18.3	20.7	23.2	25.8	28.6	31.5	34.5
TOTAL CONCRETE VOLUME / m³	2.8	4.8	5.0	6.4	7.8	9.5	11.2	13.1	15.2	17.4	19.7	22.2	24.8	27.6	30.5	33.6	36.8	40.1	43.6
AREA OF CONCRETE BASE / m²	9.19	14.92	20.63	26.06	32.65	46.33	57.25	69.29	82.46	95.78	112.94	128.81	145.60	163.49	182.64	202.72	229.66	253.83	277.15

PERMASTORE LTD ISO 9001 UNCONTROLLED COPY

CAD DRAWING - NO MANUAL ALTERATIONS PERMITTED

TOLERANCES - UNLESS OTHERWISE STATED - LINEAR (ANGLE) STOCK SIZES & DRILLED HOLES: NO DECIMALS ± 1㎜ 1 DECIMAL ± 0.5㎜ 2 DECIMALS ± 0.25㎜ 3 DECIMALS ± 0.05㎜ ANGULAR ± 1°	DRN PJS	DATE 7 Dec 2001	MATERIAL --	PERMASTORE TANKS & SILOS "Permastore" Ltd. Cwm Cullin Road Trading Estate Pontardawe Swansea SA8 4HT England Tel (01792) 867000 Fax (01792) 867001	CONCRETE BASE ASSEMBLY 11'-58" DIAMETER
	SCALE NTS	CHECKED PC	MATERIAL SPEC --		SLURRYSTORE
	ISSUED --	CAP No --	FINISH --		--
	THIRD ANGLE PROJECTION				DRG No 537059 SHT 1 OF 2

PART No	SALES / JAC100	10 20 30 40 50 60 70 80 90 100 DRAWING SCALE (mm)	REMOVE SHARP EDGES	IF IN DOUBT ASK	WELD METHOD MUST ENSURE MINIMUM DISTORTION	CN No & DATE	REVISION	ISS No

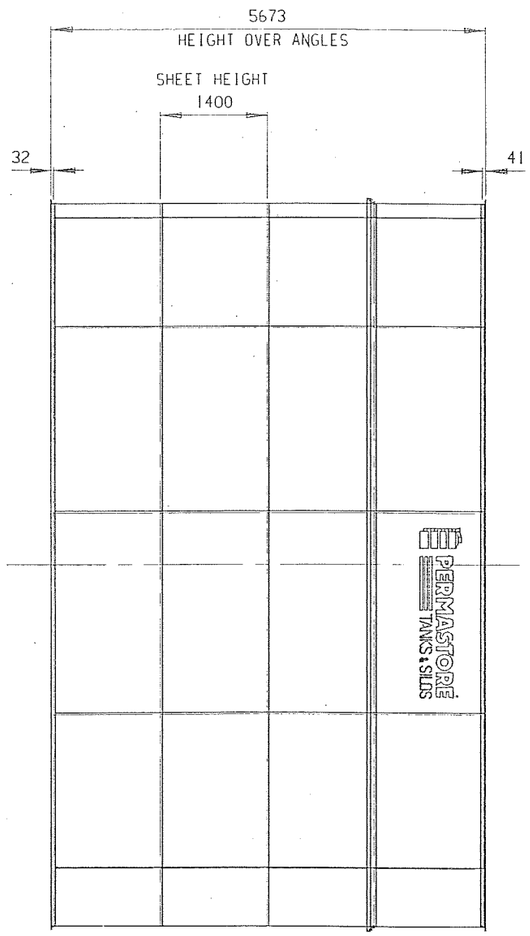

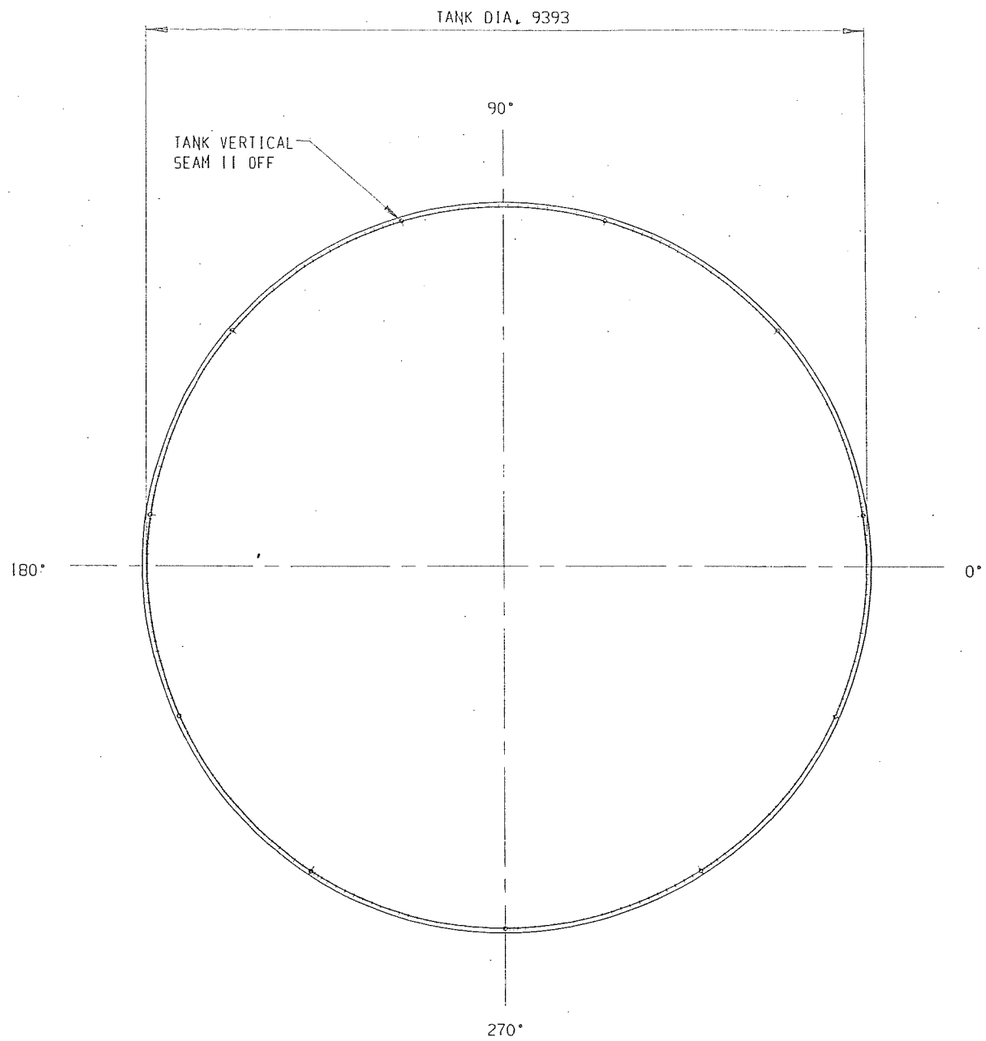

CAD DRAWING - NO MANUAL ALTERATIONS PERMITTED

CONFIDENTIAL COPYRIGHT RESERVED
NO UNAUTHORISED COPYING OR EXHIBITION

TOLERANCES - UNLESS OTHERWISE STATED - LINEAR (EXCEPT STOCK SIZES & DRILLED HOLES) NO DECIMALS ± 1mm; 1 DECIMAL ± 0.5mm; 2 DECIMALS ± 0.25mm; 3 DECIMALS ± 0.05mm; ANGULAR ± ½ DEG	DRAWN JAC	DATE 21 May 2009	MATERIAL GLASS FUSHED TO STEEL	PERMASTORE® TANKS & SILOS Permastore Ltd Eye, Suffolk IP23 7HS, England. Tel (01379) 870723 Fax (01379) 870530 PERMASTORE® is a registered tradenark of Permastore Ltd	DESCRIPTION 3120 PERMASTORE SLURRY TANK
	SCALE 50+1	CHECKED	MATERIAL SPEC T.B.C.		USAGE SLURRY TANK
	ISSUED	EXP No	FINISH T.B.C.		REF --
	THIRD ANGLE PROJECTION				PART No SALES / JAC100

PART No	537059	10 20 30 40 50 60 70 80 90 100 DRAWING SCALE (mm)	REMOVE SHARP EDGES	IF IN DOUBT ASK	WELD METHOD MUST ENSURE MINIMUM DISTORTION

CN No & DATE	REVISION	ISS No
24/53332 KCR 9.10.98.	NOTES MODIFIED TO SUIT SHEET 1	1
24/53405 W.W. 8.12.98.	NOTE 4.b) AMENDED "TOP ANGLE-" TO "-EVENLY DISTRIBUTED" ADDED.	2

1. SELECTION OF SITE

THE SITE OF A SLURRYSTORE MUST COMPLY WITH THE FOLLOWING CONDITIONS:

a) BE CONSISTENT OVER THE WHOLE AREA AND NOT LIABLE TO DIFFERENTIAL SUBSIDENCE.
b) BE STABLE AND FREE FROM ORGANIC MATERIALS.
c) NOT BE MADE UP GROUND.
d) IF CLAY SOIL IS PRESENT THE SLURRYSTORE MUST BE DISTANT FROM ANY TREES AT LEAST EQUAL TO TWICE THEIR HEIGHT. IF TREES WERE CLOSER THAN THIS THEY MUST HAVE BEEN FELLED FOR AT LEAST 12 MONTHS.
e) A SUITABLY QUALIFIED CIVIL ENGINEER MUST CONFIRM THAT THE ABOVE CONDITIONS ARE COMPLIED WITH.

2. EXCAVATION INSTRUCTIONS

a) DRIVE A CENTRE STAKE IN AT THE CENTRE OF THE SLURRYSTORE.
b) FROM THE CENTRE STAKE MARK OUT THE POSITION OF THE FOOTINGS (DIMENSIONS 'E' & 'D' - SEE TABLE ON SHEET 1).
c) EXCAVATE TRENCH FOR FOOTINGS, 460mm MINIMUM DEPTH.
d) EXCAVATE WHOLE AREA TO A MINIMUM DEPTH OF 230mm (SEE SECTION B-B ON SHEET 1). ANY ORGANIC MATERIAL REMAINING MUST ALSO BE REMOVED.

3. FOOTINGS INSTRUCTIONS

a) PLACE CENTRAL GRANULAR FILL.
b) ASSEMBLE REINFORCING MESH IN FOOTINGS WITH A 400mm OVERLAP. WIRE ENDS TOGETHER AND WIRE TO VERTICAL RODS. MAINTAIN POSITIONS OF MESH AS SHOWN IN SECTION B-B (SHEET 1).
c) POUR CONCRETE, ENSURING IT FLOWS EVENLY AROUND FOOTINGS MESH. VIBRATE TO ENSURE REMOVAL OF EXCESS AIR AND MOISTURE. STRIKE CONCRETE OFF LEVEL WITH TOP OF GRANULAR FILL.

4. CONSTRUCTION METHOD OF BASE SLAB

a) ASSEMBLE FIRST RING OF TANK PER INSTRUCTIONS (SEE APPROPRIATE TANK ASSEMBLY DRAWING).
b) ALL BASE RING SHEET JOINTS MUST BE FULLY EXPANDED. TOP ANGLES MUST BE TEMPORARILY FITTED WITHOUT MASTIC UTILISING A MINIMUM SIX No. BOLTS EVENLY DISTRIBUTED AND THE CONCENTRICITY OF THE TANK MUST ALSO BE CHECKED PRIOR TO POURING THE BASE CONCRETE.
c) LAY POLYTHENE SHEET IN POSITION WITH 150mm MINIMUM OVERLAP.
d) LAY FLOOR MESH PER ASSEMBLY DRAWING. SUPPORT MESH AT APPROXIMATELY 1m SQUARE INTERVALS.
e) POUR CONCRETE CAREFULLY ENSURING IT FLOWS EVENLY AROUND THE REINFORCING MESH AND UNDER THE TANK FOUNDATION ANGLES.
** PARTICULAR CARE MUST BE TAKEN TO VIBRATE THE CONCRETE ENSURING GOOD CONSOLIDATION AROUND THE PERIMETER OF THE TANK, THE BASE ANGLE, FOUNDATION BOLTS, CLAMPS AND THE OUTER PERIMETER REINFORCING MESH.
f) POUR EXTERIOR CONCRETE AT THE SAME TIME AS THE INTERIOR TO ENSURE A HOMOGENEOUS BASE SLAB.
g) IF FLOOR SLAB IS NOT CONSTRUCTED IN ONE PIECE, JOINTS SHOULD BE MADE AS SHOWN ON VIEW 'C' (SHEET 1).

5. CONSTRUCTION NOTES

a) CONCRETE MIX TO BE C40 WITH A CEMENT CONTENT BETWEEN 350kg/m³ AND 400kg/m³. THE WATER RATIO MUST NOT EXCEED 0.55. MAXIMUM SIZE AGGREGATE 20mm.
b) AS SOON AS POSSIBLE AFTER THE REMOVAL OF THE SHUTTERING IN VERTICAL JOINTS, OR THE SETTING OF THE CONCRETE IN HORIZONTAL JOINTS, THE SURFACE LAITANCE OF THE CONCRETE SHOULD BE REMOVED TO EXPOSE LARGE AGGREGATE AND LEAVE A SOLID SURFACE. IF THE CONCRETE HAS NOT HARDENENED THIS MAY BE ACHIEVED BY BRUSHING WITH A WIRE BRUSH OR PRESSURE SPRAYING WITH WATER. IF THE CONCRETE HAS SET REMOVE THE LAITANCE USING A SCALING HAMMER OR OTHER MECHANICAL DEVICE. CARE SHOULD BE TAKEN TO AVOID THE USE OF EXCESSIVELY POWERFUL HAMMERS AS THESE ARE LIKELY TO DAMAGE THE CONCRETE BY DISLODGING OR FRACTURING THE AGGREGATES. BEFORE CONCRETING IS RESUMED CARE SHOULD BE TAKEN TO ENSURE THAT THERE IS NO LOOSE MATTER ON THE CONCRETE SURFACE. THE SURFACE SHOULD BE SLIGHTLY WETTED, OR PROPRIETRY BONDING MATERIAL USED IN ACCORDANCE WITH THE MANUFACTURERS INSTRUCTIONS, IN ORDER TO ASSIST ADHESION OF THE NEW CONCRETE TO THE EXISTING CONCRETE.

PERMASTORE LTD
ISO 9001
UNCONTROLLED COPY

CAD DRAWING - NO MANUAL ALTERATIONS PERMITTED

TOLERANCES - UNLESS OTHERWISE STATED -				
LINEAR (EXCEPT STOCK SIZES & DRILLED HOLES)		DRAWN R.S.	DATE 9 Dec 98	MATERIAL ----
NO DECIMALS	± 1mm	SCALE 1	CHECKED	MATERIAL SPEC ----
1 DECIMAL	± 0.5mm	FINISHED	EXP No	FINISH ----
2 DECIMALS	± 0.25mm	THIRD ANGLE PROJECTION		
3 DECIMALS	± 0.05mm			
ANGULAR	± 0.5°			

PERMASTORE TANKS & SILOS
Permastore Ltd
Eye, Suffolk
IP23 7HX England
Tel (01379) 870411
Fax (01379) 870033

DESCRIPTION	CONCRETE BASE ASY SHT 2/2
	SLURRYSTORES 11FT-62FT

	537059