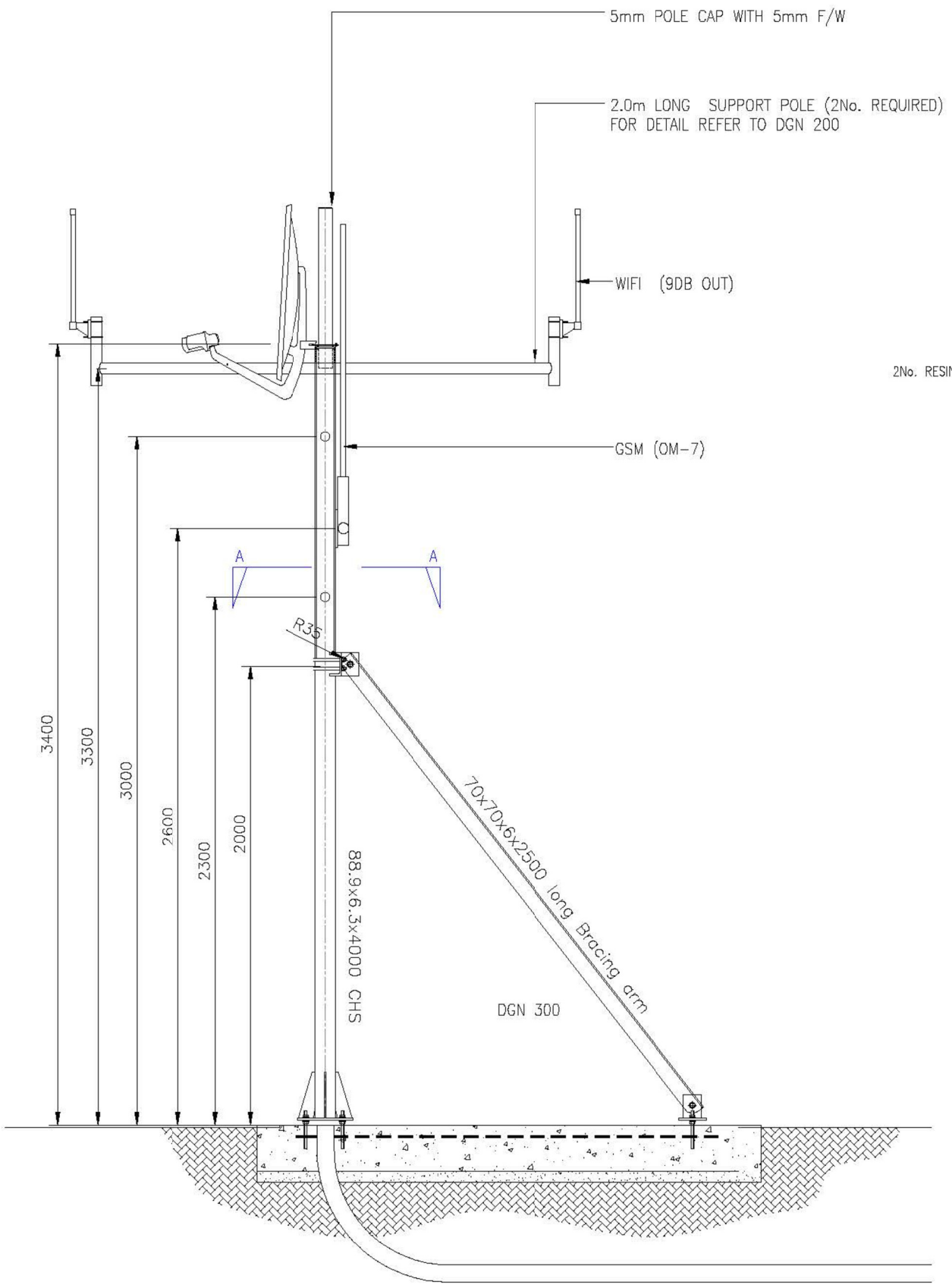

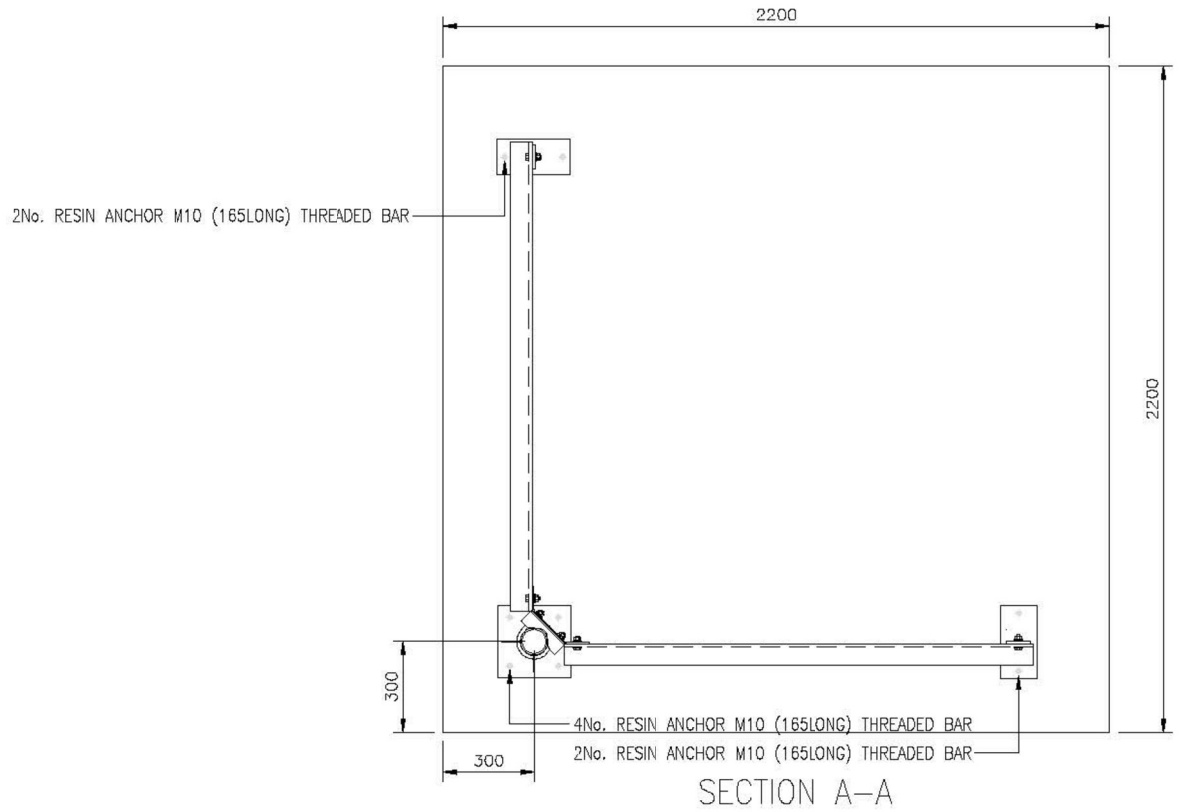

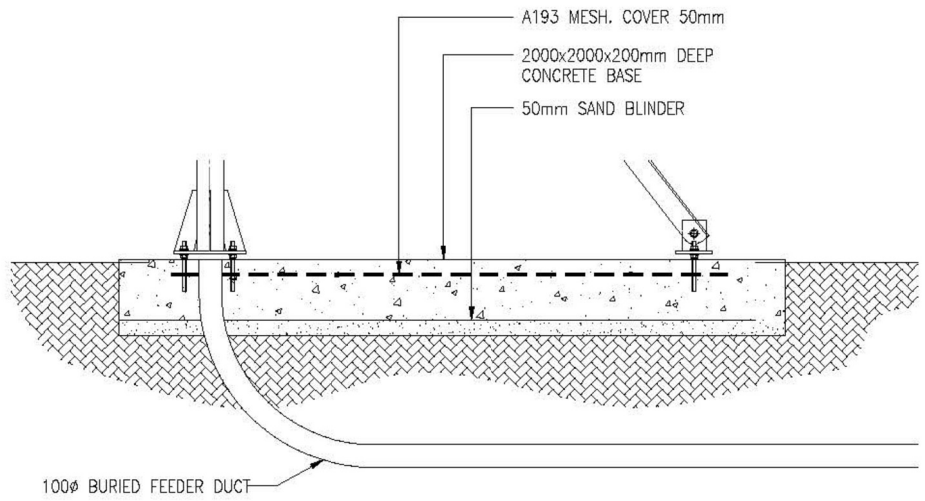

Elgar Middleton
Infrastructure & Energy

Drawing no:	1462-D010
Revision:	V1
Date:	21 Jan 15
Project:	Heywood Grange SolarPV
Drawing Title:	Satellite_Pole Elevation_1.0
Scale:	1:25 @ A3

N

aardvark
environment matters
Aardvark EM Limited
Higher Ford Wivelscombe
Taunton Somerset TA4 2RL
Tel: 01984 624989
Fax: 01984 623912
environment@aardvarkem.co.uk
www.aardvarkem.co.uk

Notes:

Satellite Pole made of galvanized steel. Colour = RAL 6005

File:\\AARDVARK-3\Nick E\Data 2014\1462 Elgar Middleton Heywood Grange\CAD Drawings\Technical Drawings\Satellite Pole.dwg
Drawn By: JS Checked By: JH